SCOPE OF WORK:

1. SURVEY, INVESTIGATION, DESIGN, PROCUREMENT AND CONSTRUCTION OF RCC PERMANENT STRUCTURE JETTY SHALL BE CONSTRUCTED WITH IN THE WATER BODY WITH RELATED OTHER FACILITIES AS DETAILED BELOW.

2. THE RCC JETTY CONTAINS 18 LEVEL SLABS TOTAL LENGTH OF ALL SLABS ARE 216 M (REFERENCE GAD IS ENCLOSED FOR YOUR INFORMATION AND INDICATIVE ONLY AND THE DIMENSIONS GIVEN FOR SLAB LENGTH, WIDTH AND THICKNESS ARE TO BE TREATED AS MINIMUM AND SHALL BE ENSURED).

3. THE DESIGN SHALL BE CARRIED OUT BY THE CONTRACTOR DULY VETTED BY THIRD PART ROAD SAFETY CONSULTANT OF HPRIDC AND COST INCLUDES INVESTIGATION/DESIGN CHARGES.

4. THE RCC JETTY CONTAINS 18 NUMBERS OF SLABS, EACH SLAB SIZE OF DIMENSIONS: 12m LENGTH AND 4m WIDTH. THE SLABS SHALL BE CONNECTED BY PROVIDING RCC SOLID STEPS FOR MOVING PUBLIC/TOURISTS FROM ONE SLAB TO THE OTHER TO REACH THE BOATING PLATFORM/FLOATING JETTY.

5. THE TOTAL JETTY SHALL BE CONSTRUCTED WITH REINFORCED CEMENT CONCRETE (RCC) STRUCTURES HAVE PILE FOUNDATIONS OF MINIMUM 600MM DIA PILE OF REQUIRED PILE DEPTH AND EACH SLAB SHALL HAVE MINIMUM 6 NUMBER OF PILES i.e. 18 SLABS X 6 PILES=108 TOTAL NUMBER OF PILES. THE COST OF PILING INCLUDES COST OF TEST PILE, LOAD TESTING CHARGES OF TEST AND WORKING PILES AND MS LINING IF REQUIRED.

6. RCC PARAPET/RAILING SOLID WALL OF 1.0M HEIGHT FROM EACH SLAB TOP LEVEL ON BOTH SIDES OF ALL SLABS SHALL BE PROVIDED AND OPENABLE RAILING SHALL BE PROVIDED AT REQUIRED LOCATIONS IN RCC PARAPET WALL, OVER AND ABOVE THE RCC PARAPET WALL SS RAILING ALSO (WITH STAINLESS STEEL 304 GRADE SUITABLE SECTIONS) OF HEIGHT 0.50M SHALL BE PROVIDED.

7. LIGHTING (WITH MINIMUM 40LUX) SHALL BE PROVIDED ON ALL SLABS AREA.

8. EXISTING APPROACH ROAD TO JETTY SHALL BE DEVELOPED WITH MINIMUM 200M LENGTH ON GROUND LEVEL AND STREET LIGHTS SHALL BE PROVIDED FOR THE APPROACH ROAD WITH MINIMUM 6 NUMBERS OF STREET LIGHT POLES WITH LED LIGHTING.

9. ALL LIGHTING PROVISION SHALL BE LED LATEST LIGHTING SYSTEM.

10. SUPPLY AND PROVIDING AT SPECIFIED LOCATION HDPE MATERIAL FLOATING JETTY (BARGE) OF SIZE 10m X 5m = 2 NUMBERS (LOCATION WILL BE FINALIZED BY PROJECT MANAGER).

11. SHELTER HOUSE ONE NUMBER OF PLINTH AREA 75 SQM SHALL BE PROVIDED TOWARDS LUHNU STADIUM (DESIGN, CONSTRUCTION) WITH FACILITIES FOR WAITING,TOILET FACILITIES FOR MEN,WOMEN AND PHYSICALLY DISABLED PERSONS,LIGHTING ETC

12. ALL THE STRUCTURAL ELEMENTS SHALL BE PAINTED WITH APPROVED WATER PROOF, RUST PROOF PAINTING.

13. THE WORK SHALL BE EXCUTED BASED ON THE APPROVED DESIGNS AND DRAWINGS BY THE SUPERVISION CONSULTANTS (OR) HPRIDC.

14. THE ABOVE ALL ITEMS ARE PROPOSED IN BOQ AS LUMPSUM SINGLE BOQ ITEM.

NOTES:
1. ALL DIMENSIONS ARE IN MILLIMETERS UNLESS OTHERWISE SPECIFIED.

REV	DATE	DESCRIPTION	DESIGNED	DRAWN	CHECKED	APPROVED

CLIENT:
HIMACHAL PRADESH ROAD AND OTHER INFRASTRUCTURE DEVELOPMENT CORPORATION LIMITED.

CONSULTANT:
SATRA SERVICES AND SOLUTIONS PVT.LTD.
#1-8-359 to 363, 4th Floor,Centre Point Building,SP Road, Begumpet, Secunderabad,Telangana – 500003, India.
Tel: +91 40 2784 0040, Fax: +91 40 2784 0050,
E-mail: info@satragroup.in, Web: www.satragroup.in

PROJECT:
HIMACHAL PRADESH STATE ROADS TRANSFORMATION PROJECT (HPSRTP)

SCALE: AS SHOWN
DATE

JOB No. : 01041055
DESIGNED
DRAWN
CHECKED
APPROVED

TITLE : JETTY PLAN LAYOUT
REV. 0
SIZE : A3
DRAWING NO : HP/STR/JETTY/101
ROAD NAME : Package-IV: Upgradation of Raghunathpura-Mandi-Harpura-Bharari Road in Bilaspur District from Km 0/000 to Km 2/740.
SHEET 02 OF 07

Z:\01041055-HPSRTP\04 Designs\02 Structures\02 Drawings\TENDER PURPOSE_21-12-2020\OSR-11\JETTY\1 HP-RAG-BHA-STR-JETTY-101.dwg

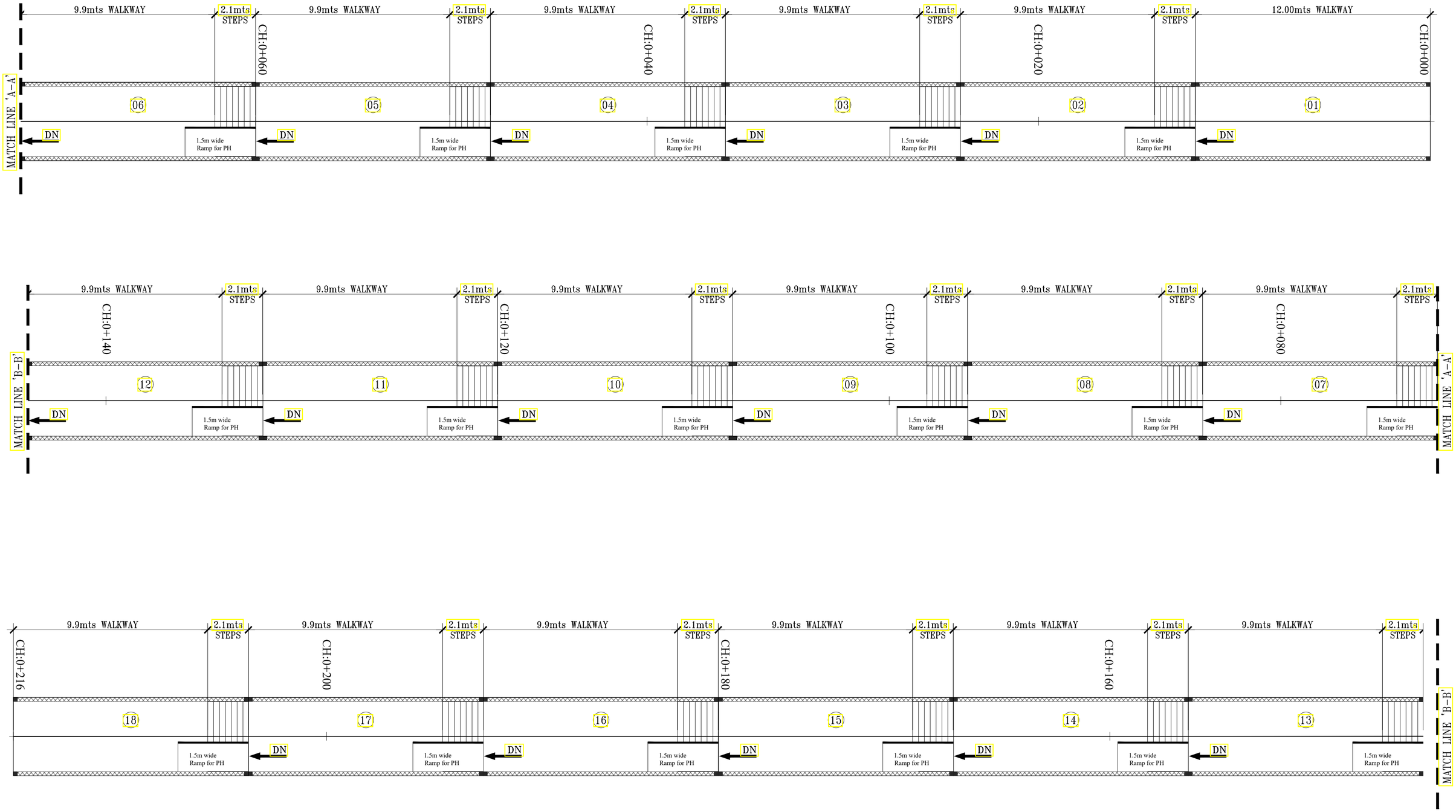

RAMP PLAN

NOTES:
1. ALL DIMENSIONS ARE IN MILLIMETERS UNLESS OTHERWISE SPECIFIED.

REV	DATE	DESCRIPTION	DESIGNED	DRAWN	CHECKED	APPROVED

CLIENT:
HIMACHAL PRADESH ROAD AND OTHER INFRASTRUCTURE DEVELOPMENT CORPORATION LIMITED.

CONSULTANT:
SATRA SERVICES AND SOLUTIONS PVT.LTD.
#1-8-359 to 363, 4th Floor,Centre Point Building,SP Road, Begumpet, Secunderabad,Telangana – 500003, India.
Tel: +91 40 2784 0040, Fax: +91 40 2784 0050,
E-mail: info@satragroup.in, Web: www.satragroup.in

PROJECT:
HIMACHAL PRADESH STATE ROADS TRANSFORMATION PROJECT (HPSRTP)

SCALE: AS SHOWN
DATE

JOB No. : 01041055
DESIGNED
DRAWN
CHECKED
APPROVED

TITLE : JETTY PLAN LAYOUT
REV. 0
SIZE : A3
DRAWING NO : HP/STR/JETTY/101

ROAD NAME : Package-IV:
Upgradation of Raghunathpura-Mandi-Harpura-Bharari Road in Bilaspur District from Km 0/000 to Km 2/740.

SHEET 03 OF 07

Z:\01041055-HPSRTP\04 Designs\02 Structures\02 Drawings\TENDER PURPOSE_21-12-2020\OSR-11\JETTY\1 HP-RAG-BHA-STR-JETTY-101.dwg

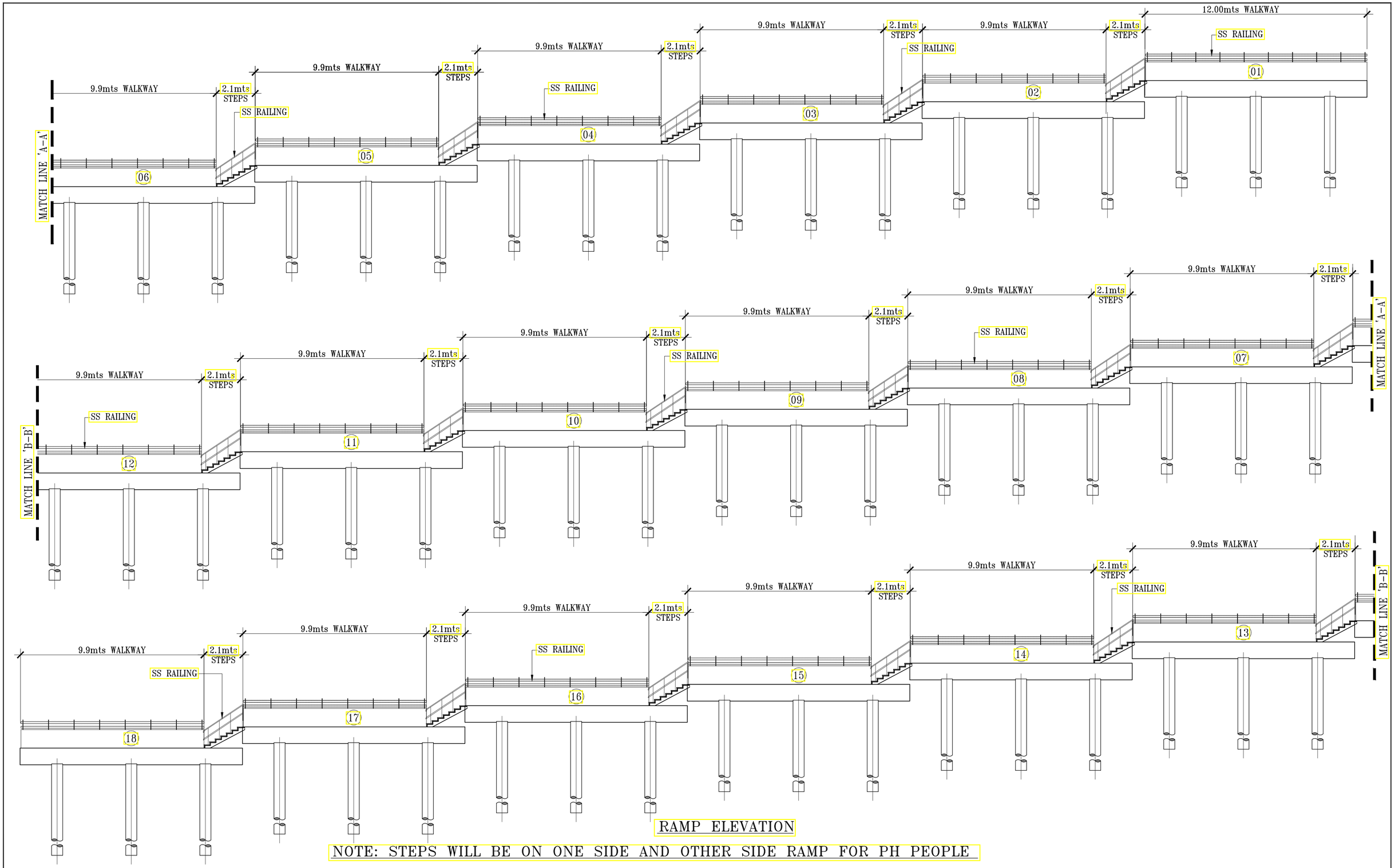

RAMP ELEVATION

NOTE: STEPS WILL BE ON ONE SIDE AND OTHER SIDE RAMP FOR PH PEOPLE

NOTES:
1. ALL DIMENSIONS ARE IN MILLIMETERS UNLESS OTHERWISE SPECIFIED.

REV	DATE	DESCRIPTION	DESIGNED	DRAWN	CHECKED	APPROVED

CLIENT:

HIMACHAL PRADESH ROAD AND OTHER INFRASTRUCTURE DEVELOPMENT CORPORATION LIMITED.

CONSULTANT:

SATRA

SATRA SERVICES AND SOLUTIONS PVT.LTD.

#1-8-359 to 363, 4th Floor,Centre Point Building,SP Road, Begumpet, Secunderabad,Telangana – 500003, India.
Tel: +91 40 2784 0040, Fax: +91 40 2784 0050,
E-mail: info@satragroup.in, Web: www.satragroup.in

PROJECT:

HIMACHAL PRADESH STATE ROADS TRANSFORMATION PROJECT (HPSRTP)

SCALE: AS SHOWN

DATE

JOB No. : 01041055

DESIGNED	
DRAWN	
CHECKED	
APPROVED	

TITLE : JETTY PLAN LAYOUT

REV. 0

SIZE : A3

DRAWING NO : HP/STR/JETTY/101

ROAD NAME : Package-IV:
Upgradation of Raghunathpura-Mandi-Harpura-Bharari Road in Bilaspur District from Km 0/000 to Km 2/740.

SHEET 04 OF 07

Z:\01041055-HPSRTP\04 Designs\02 Structures\02 Drawings\TENDER PURPOSE_21-12-2020\OSR-11\JETTY\1 HP-RAG-BHA-STR-JETTY-101.dwg

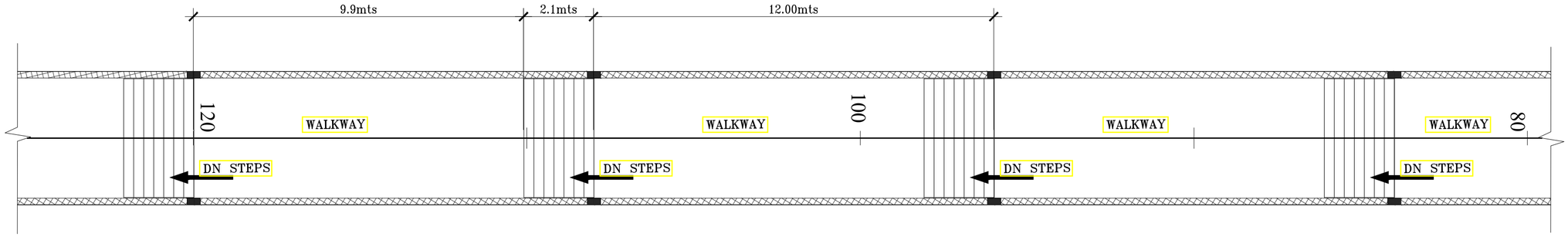

RAMP PLAN

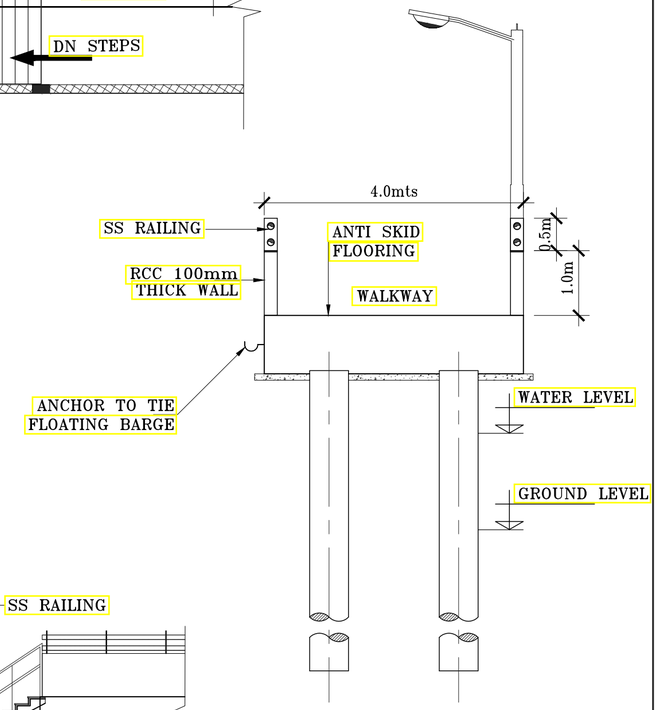

RAMP SECTION

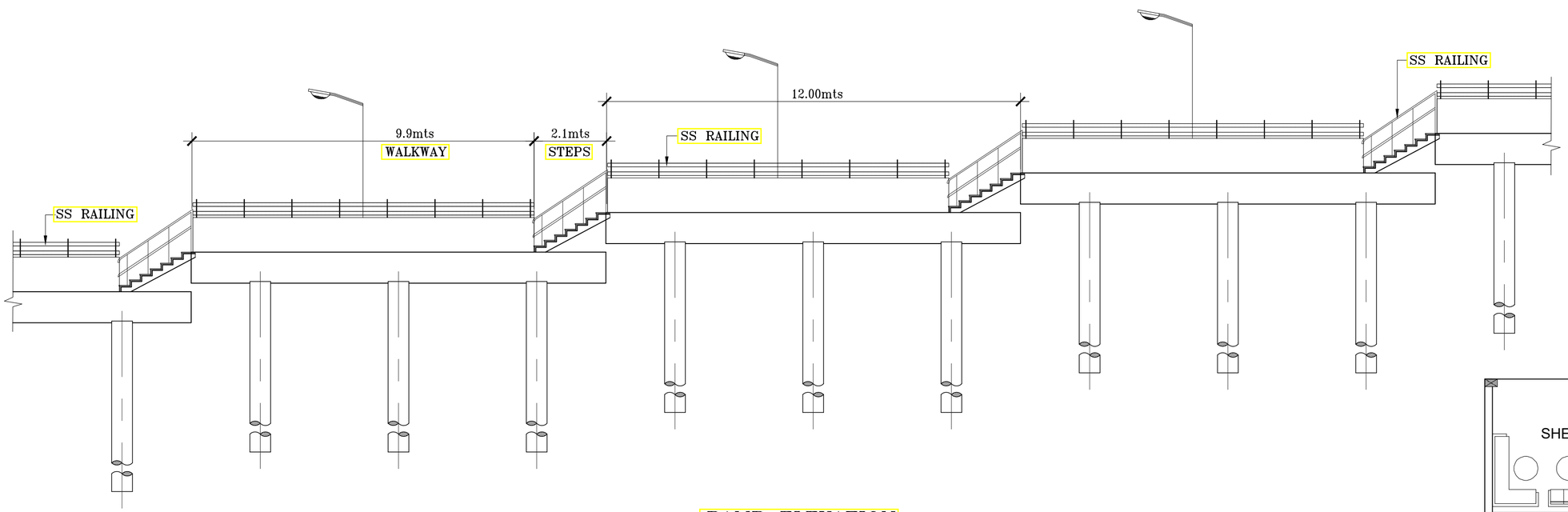

RAMP ELEVATION

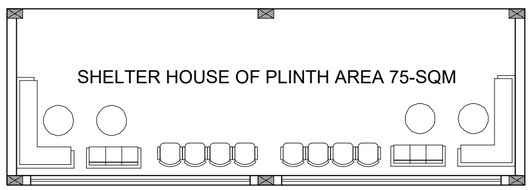

NOTES:
1. ALL DIMENSIONS ARE IN MILLIMETERS UNLESS OTHERWISE SPECIFIED.

REV	DATE	DESCRIPTION	DESIGNED	DRAWN	CHECKED	APPROVED

CLIENT:

HIMACHAL PRADESH ROAD AND OTHER INFRASTRUCTURE DEVELOPMENT CORPORATION LIMITED.

CONSULTANT:

SATRA SERVICES AND SOLUTIONS PVT.LTD.
#1-8-359 to 363, 4th Floor,Centre Point Building,SP Road, Begumpet, Secunderabad,Telangana – 500003, India.
Tel: +91 40 2784 0040, Fax: +91 40 2784 0050,
E-mail: info@satragroup.in, Web: www.satragroup.in

PROJECT:

HIMACHAL PRADESH STATE ROADS TRANSFORMATION PROJECT (HPSRTP)

SCALE: AS SHOWN

DATE

JOB No. : 01041055

DESIGNED
DRAWN
CHECKED
APPROVED

TITLE : JETTY PLAN LAYOUT

REV. 0

SIZE : A3

DRAWING NO : HP/STR/JETTY/101

ROAD NAME : Package-IV: Upgradation of Raghunathpura-Mandi-Harpura-Bharari Road in Bilaspur District from Km 0/000 to Km 2/740.

SHEET 05 OF 07

Z:\01041055-HPSRTP\04 Designs\02 Structures\02 Drawings\TENDER PURPOSE_21-12-2020\OSR-11\JETTY\1 HP-RAG-BHA-STR-JETTY-101.dwg

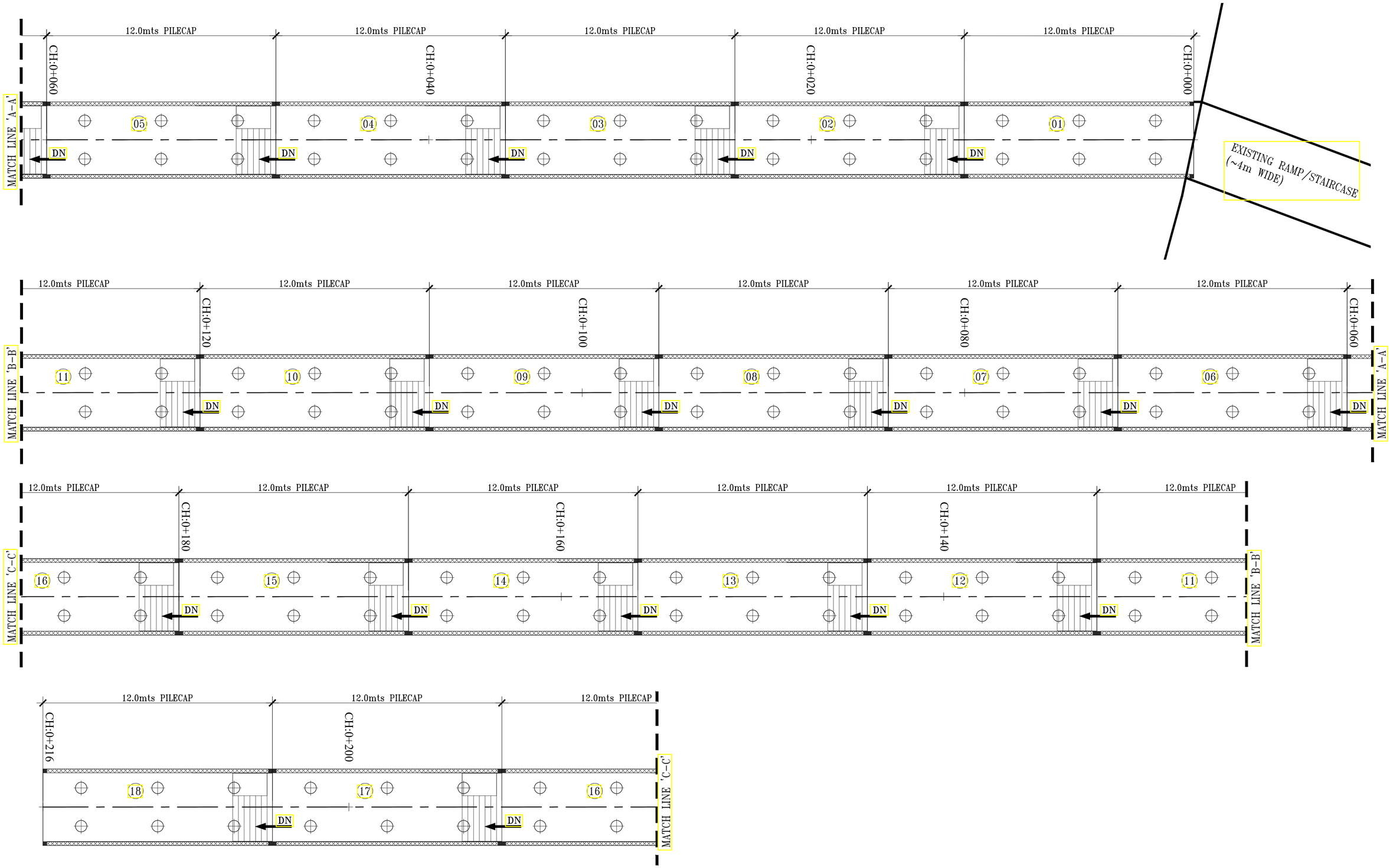

DETAILS OF PILE CAP

NOTES:
1. ALL DIMENSIONS ARE IN MILLIMETERS UNLESS OTHERWISE SPECIFIED.

REV	DATE	DESCRIPTION	DESIGNED	DRAWN	CHECKED	APPROVED

CLIENT:
HIMACHAL PRADESH ROAD AND OTHER INFRASTRUCTURE DEVELOPMENT CORPORATION LIMITED.

CONSULTANT:
SATRA
SATRA SERVICES AND SOLUTIONS PVT.LTD.
#1-8-359 to 363, 4th Floor,Centre Point Building,SP Road, Begumpet, Secunderabad,Telangana – 500003, India.
Tel: +91 40 2784 0040, Fax: +91 40 2784 0050,
E-mail: info@satragroup.in, Web: www.satragroup.in

PROJECT:
HIMACHAL PRADESH STATE ROADS TRANSFORMATION PROJECT (HPSRTP)

SCALE: AS SHOWN
DATE

JOB No. : 01041055
DESIGNED
DRAWN
CHECKED
APPROVED

TITLE : JETTY PLAN LAYOUT
REV. 0
SIZE : A3
DRAWING NO : HP/STR/JETTY/101

ROAD NAME : Package-IV:
Upgradation of Raghunathpura-Mandi-Harpura-Bharari Road in Bilaspur District from Km 0/000 to Km 2/740.

SHEET 06 OF 07

Z:\01041055-HPSRTP\04 Designs\02 Structures\02 Drawings\TENDER PURPOSE_21-12-2020\OSR-11\JETTY\1 HP-RAG-BHA-STR-JETTY-101-SH6.dwg

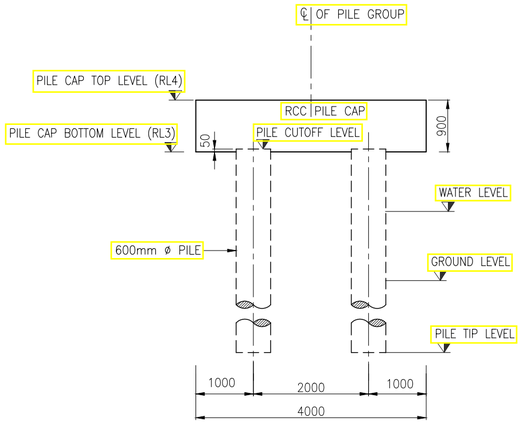

SECTION B-B

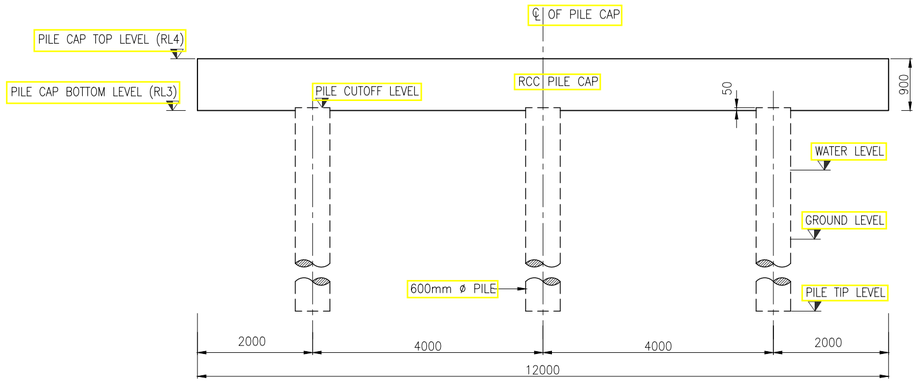

SECTION A-A

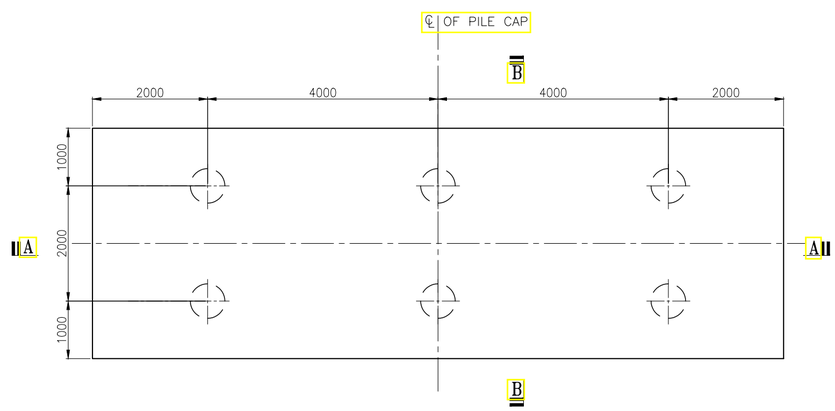

DIMENSION DETAILS OF PILE CAP

NOTES:

1. ALL DIMENSIONS ARE IN MILLIMETRES UNLESS OTHERWISE MENTIONED.ONLY WRITTEN DIMENSIONS SHALL BE FOLLOWED.
2. MINIMUM GRADE OF CONCRETE FOR PILE AND PILECAP IS M40.
3. ALL UNTENSIONED REINFORCEMENT SHALL BE TMT BARS OF GRADE DESIGNATION S-500 HAVING YIELD STRENGTH OF 500 Mpa, CONFORMING TO IS:1786 STANDARD.
4. ANTI CORROSIVE TREATMENT TO BE PROVIDED FOR THE STRUCTURAL REINFORCEMENT AND SURFACED CONCRETE.
5. 6mm THICK STEEL LINER SHOULD BE PROVIDED ON PILE UPTO SCOUR DEPTH.

NOTES:
1. ALL DIMENSIONS ARE IN MILLIMETERS UNLESS OTHERWISE SPECIFIED.

REV	DATE	DESCRIPTION	DESIGNED	DRAWN	CHECKED	APPROVED

CLIENT:

HIMACHAL PRADESH ROAD AND OTHER INFRASTRUCTURE DEVELOPMENT CORPORATION LIMITED.

CONSULTANT:

SATRA

SATRA SERVICES AND SOLUTIONS PVT.LTD.

#1-8-359 to 363, 4th Floor,Centre Point Building,SP Road, Begumpet, Secunderabad,Telangana – 500003, India.
Tel: +91 40 2784 0040, Fax: +91 40 2784 0050,
E-mail: info@satragroup.in, Web: www.satragroup.in

PROJECT:

HIMACHAL PRADESH STATE ROADS TRANSFORMATION PROJECT (HPSRTP)

SCALE: AS SHOWN

DATE

JOB No. : 01041055

DESIGNED
DRAWN
CHECKED
APPROVED

TITLE : JETTY PLAN LAYOUT

REV. 0

SIZE : A3

DRAWING NO : HP/STR/ JETTY/101

ROAD NAME : Package-IV:
Upgradation of Raghunathpura-Mandi-Harpura-Bharari Road in Bilaspur District from Km 0/000 to Km 2/740.

SHEET 07 OF 07

C:\Users\satyanarayanac\appdata\local\temp\AcPublish_15496\1 HP-RAG-BHA-STR-JETTY-101-SH7.dwg

PIPE CULVERTS

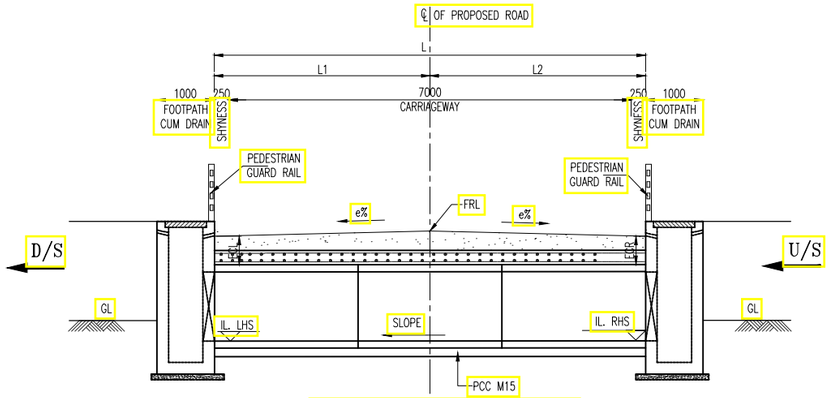

SECTIONAL ELEVATION AT X-X
(SCALE 1:75)

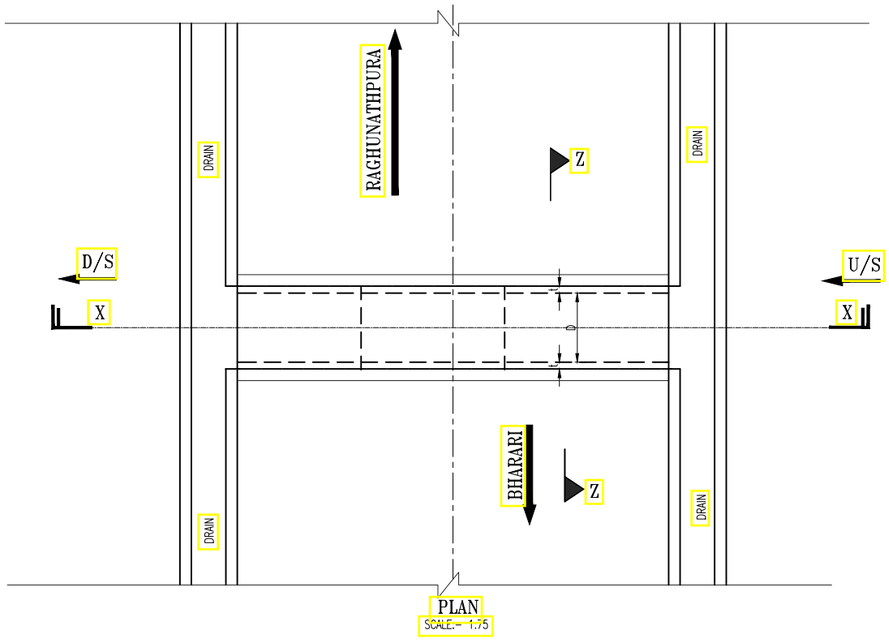

PLAN
SCALE:- 1:75

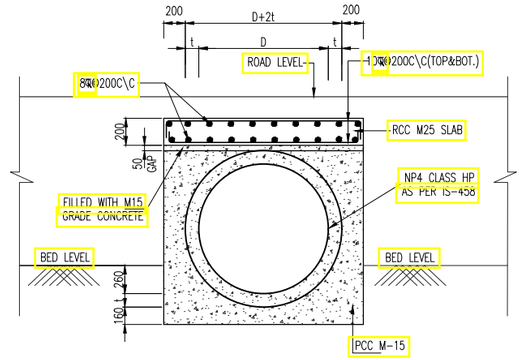

SECTION - Z-Z
(SCALE 1:40)

NOTES:

1. ALL DIMENSIONS ARE IN MILLIMETERS AND LEVELS ARE IN METERS UNLESS OTHERWISE MENTIONED. ONLY WRITTEN DIMENSIONS ARE TO BE FOLLOWED. NO DIMENSION SHALL BE SCALED.
2. ALL PIPES FOR NEW CONSTRUCTION SHALL BE OF NP4 CLASS TYPE CONFORMING TO I.S : 458.
3. PIPES SHALL BE JOINTED BY INTERNAL FLUSH JOINT AS PER IS 458 & AS PER THE DETAILS GIVEN IN SECTION 2906 OF MORTH SPECIFICATIONS OF ROAD AND BRIDGE WORKS. JOINTING SPACE SHALL BE FILLED WITH CEMENT MORTAR OF PROPORTION 1:2 OF CEMENT & SAND.
4. LENGTH OF EACH PIPE HAS BEEN CONSIDERED AS 2.5M. SMALLER PIPE OF 1.25M LENGTH HAS BEEN PROPOSED AT THE END TO MEET THE REQUIREMENT OF PART LENGTH OF PIPE.
5. FRL, CAMBER/SUPERELEVATION & WIDTH OF THE MEDIAN AT PARTICULAR LOCATION SHALL BE VERIFIED WITH THE HIGHWAY PLAN, PROFILE AND CROSS SECTION DRAWINGS.
6. FOR PIPE BEDDING COMPACTED GRANULAR MATERIAL HAS BEEN PROVIDED AS PER THE SPECIFICATION OF IRC: SP: 13-2004.
7. ANY LOOSE/UNSUITABLE SOIL FOUND BELOW THE PIPE/HEAD WALL, THE SAME SHALL BE REPLACED WITH THE SAND OR COMPACTED GRANULAR MATERIAL AS DIRECTED BY ENGINEER-IN-CHARGE.
8. LONGITUDINAL SLOPE OF PROPOSED PIPE SHALL MATCH WITH THE EXISTING PIPE BUT SHALL NOT BE LESS THAN 1:1000.
9. FIRST CLASS BEDDING CAN BE USED FOR A MAXIMUM FILL HEIGHT OF 4M.
10. GRADE OF CONCRETE FOR PCC HEAD WALL IS M20.
11. EDGE GAP BETWEEN THE PIPE OF DRAIN WALL TO BE COVERED WITH PCC.
12. PIPE LENGTH PROVIDED BASED ON AVAILABILITY OF ROW.

S.No	Existing Chainge	Design Chainge	Design FRL @ PCL	Camber e% (LHS)	Camber e% (RHS)	Flow direction	IL LHS (m)	IL RHS (m)	Size of Pipe			Cushion(m) (LHS) 'ECL'	Cushion(m) (RHS) 'ECR'	Lengths of Pipe (m)			Length of Head Wall	Type of TCS	Type of Proposal
									No of Pipes	Dia of Pipe 'D'	Thk of Pipe 't'			Lengths of Pipe(m) L	L1	L2			
1	0+150	0+150	575.515	-0.88 %	-4.71 %	L-R	574.184	574.167	1	0.9	0.110	0.000	0.000	8.75	4.35	4.35	6.00	TCS-1	New Construction

NOTES:
1. ALL DIMENSIONS ARE IN MILLIMETERS UNLESS OTHERWISE SPECIFIED.

REV	DATE	DESCRIPTION	DESIGNED	DRAWN	CHECKED	APPROVED

CLIENT:
HIMACHAL PRADESH ROAD AND OTHER INFRASTRUCTURE DEVELOPMENT CORPORATION LIMITED.

CONSULTANT:
SATRA SERVICES AND SOLUTIONS PVT.LTD.
#1-8-359 to 363, 4th Floor,Centre Point Building,SP Road, Begumpet, Secunderabad,Telangana – 500003, India.
Tel: +91 40 2784 0040, Fax: +91 40 2784 0050,
E-mail: info@satragroup.in, Web: www.satragroup.in

PROJECT:
HIMACHAL PRADESH STATE ROADS TRANSFORMATION PROJECT (HPSRTP)

SCALE: AS SHOWN
DATE

JOB No. : 01041055

DESIGNED	GANESH
DRAWN	SATYA
CHECKED	PRANAI
APPROVED	PRANAI

TITLE : TYPICAL GENERAL ARRANGEMENT DRAWING FOR NEW/RECONSTRUCTION OF SINGLE CELL BOX CULVERT (FOR TCS-1)

REV. 0
SIZE : A3

DRAWING NO : HP/STR/ PC/TYP/101

ROAD NAME : Package-IV:
Upgradation of Raghunathpura-Mandi-Harpura-Bharari Road in Bilaspur District from Km 0/000 to Km 2/740.

SHEET 01 OF 01

Z:\01041055-HPSRTP\04 Designs\02 Structures\02 Drawings\TENDER PURPOSE_21-12-2020\OSR-11\OSR-11-PC\2 HP-MAN-KAL-STR-PC-TYP-102-TCS-2 (With Encasing) PKG-5.dwg

BOX CULVERTS

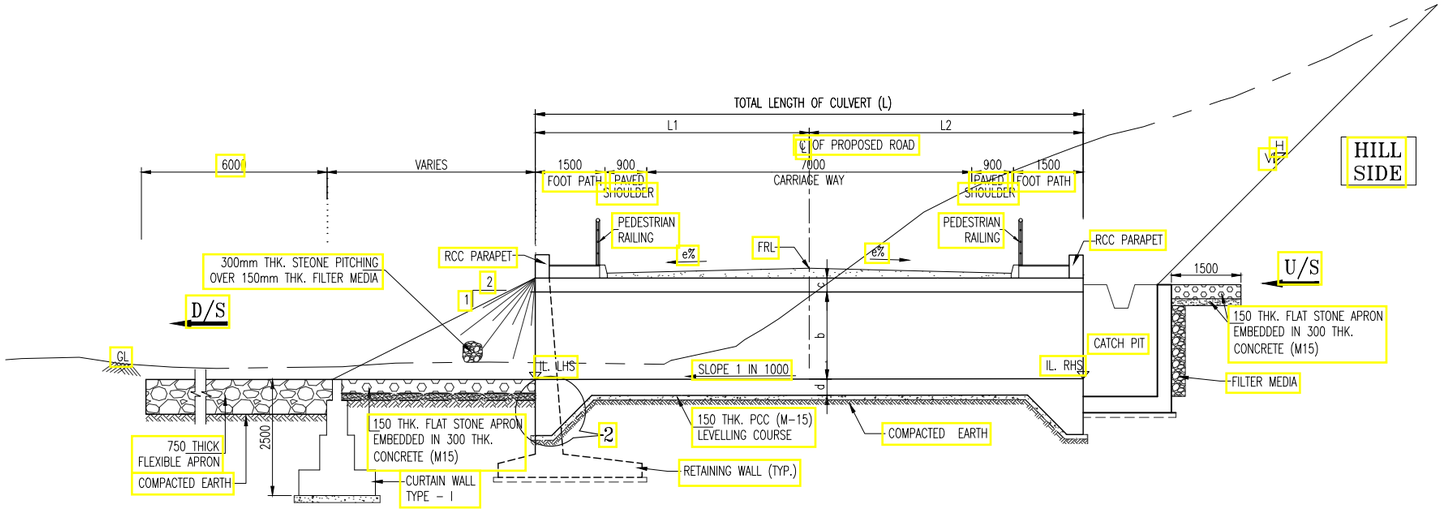

SECTIONAL ELEVATION AT A-A

(SCALE-1:100)

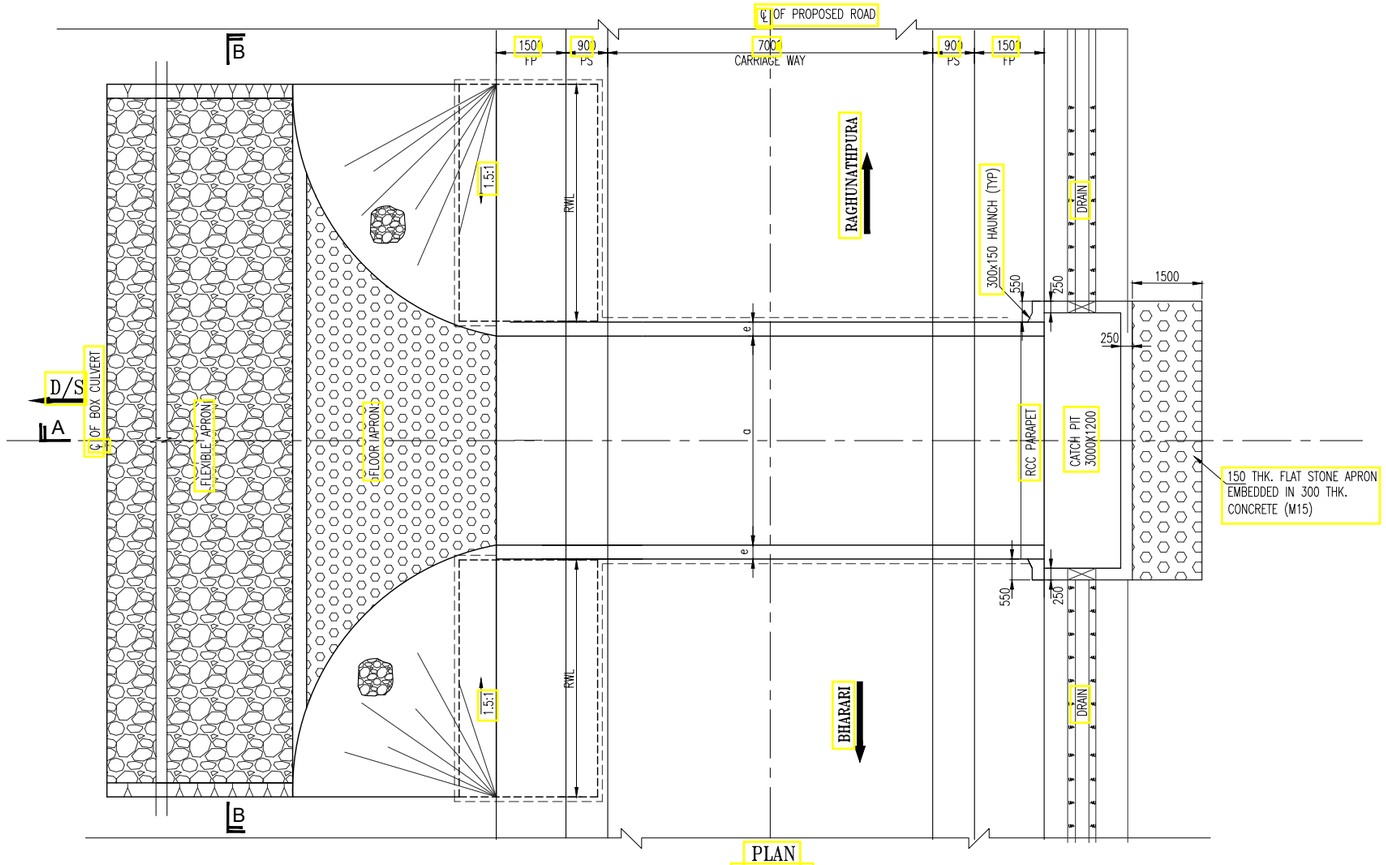

PLAN

(SCALE-1:100)

LEGEND:

FRL	:	FINISHED ROAD LEVEL
GL	:	GROUND LEVEL
IL	:	INVERT LEVEL
U/S	:	UP STREAM SIDE
D/S	:	DOWN STREAM SIDE
THK	:	THICKNESS
RWL	:	RETAINING WALL
RTL	:	RETURN WALL
ECL	:	EARTH CUSHION LEFT
ECR	:	EARTH CUSHION RIGHT

REFERENCE DRAWINGS:

1. REINFORCEMENT DETAILS OF BOX CULVERT – HP/RAG-BHA/STR/BC/TYP/201
2. MISCELLANEOUS DETAILS – HP/RAG-BHA/STR/MISC/601-606
3. RETAINING WALL DETAILS – HP/RAG-BHA/STR/MISC/608

NOTES:

1. ALL DIMENSIONS ARE IN MILLIMETRES AND LEVELS ARE IN METRES UNLESS MENTIONED OTHERWISE.
2. GRADE OF CONCRETE SHALL BE AS FOLLOWS.
   RC BOX – M30 RETAINING WALL – M30
   CURTAIN WALL, TOE WALL & LEVELING COURSE P.C.C – M15
3. CLEAR COVER FOR ANY REINFORCEMENT SHALL BE
   TOP SLAB – 40mm BOTTOM SLAB – 75mm SIDE WALL EARTH FACE – 75mm
   SIDE WALL OTHER FACE –40mm
4. GRANULAR BACK FILL MATERIAL CONFORMING TO IRC:78-2014 SHALL BE USED.
5. DIMENSIONS & LEVELS MAY VARY AS PER SITE CONDITIONS.
6. GRADE OF STEEL- Fe-500D SHALL CONFORM TO IS1786
7. ONLY WRITTEN DIMENSIONS ARE SHALL BE FOLLOWED,
   NO DIMENSION SHALL BE SCALED.
8. THIS DRAWING SHALL BE READ IN CONJUNCTION WITH RELEVANT HIGHWAY & STRUCTURAL DRAWINGS.
9. THE DIMENSIONS AND DETAILS ARE SUBJECTED TO MODIFICATION/ CORRECTION/ OMISSION DURING EXECUTION.
10. 'DK' IS DEPTH OF KEY AT BASE SALB.

FOR BASE SALB THICKNESS	VALUE OF "DK"
UPTO 900MM.	1200MM.
GREATER THAN 900MM	D+300MM.

D = BASE SLAB THICKNESS

NOTES:
1. ALL DIMENSIONS ARE IN MILLIMETERS UNLESS OTHERWISE SPECIFIED.

REV	DATE	DESCRIPTION	DESIGNED	DRAWN	CHECKED	APPROVED

CLIENT:
HIMACHAL PRADESH ROAD AND OTHER INFRASTRUCTURE DEVELOPMENT CORPORATION LIMITED.

CONSULTANT:
SATRA SERVICES AND SOLUTIONS PVT.LTD.
#1-8-359 to 363, 4th Floor,Centre Point Building,SP Road, Begumpet, Secunderabad,Telangana – 500003, India.
Tel: +91 40 2784 0040, Fax: +91 40 2784 0050,
E-mail: info@satragroup.in, Web: www.satragroup.in

PROJECT:
HIMACHAL PRADESH STATE ROADS TRANSFORMATION PROJECT (HPSRTP)

SCALE: AS SHOWN
DATE

JOB No. : 01041055

DESIGNED	GANESH
DRAWN	SATYA
CHECKED	PRANAI
APPROVED	PRANAI

TITLE : TYPICAL GENERAL ARRANGEMENT DRAWING FOR RECONSTRUCTION OF SINGLE CELL BOX CULVERT (FOR TCS-3A)

REV. 0
SIZE : A3

DRAWING NO : HP/STR/BC/TYP/101

ROAD NAME : Package-IV:
Upgradation of Raghunathpura-Mandi-Harpura-Bharari Road in Bilaspur District from Km 0/000 to Km 2/740.

SHEET 1 OF 2

Z:\01041055-HPSRTP\04 Designs\02 Structures\02 Drawings\TENDER PURPOSE_21-12-2020\OSR-11\OSR-11-BC\1 HP-RAG-BHA-STR-BC-2+510-101-1 CELL-TCS-3A.dwg

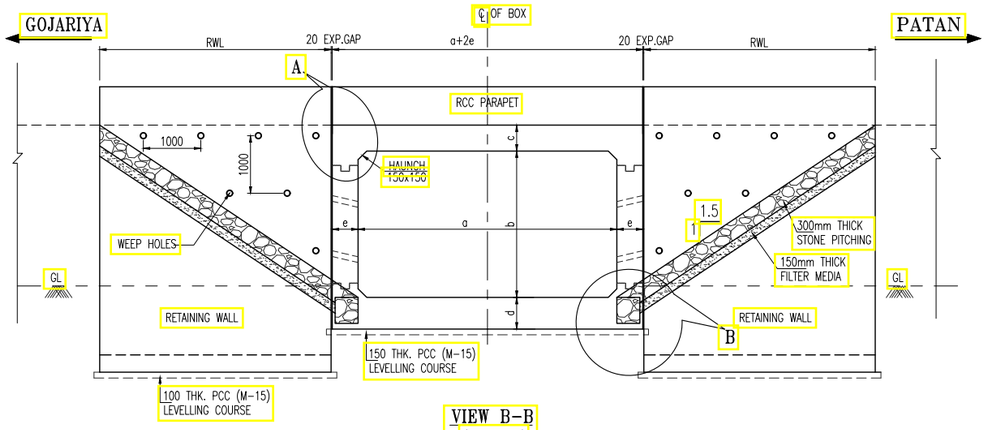

VIEW B-B
(SCALE 1:75)

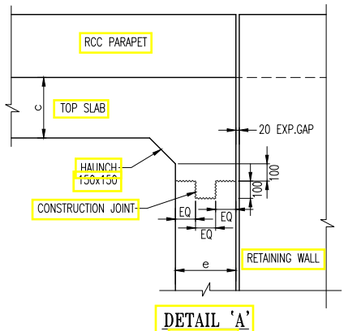

DETAIL 'A'
(SCALE 1:25)

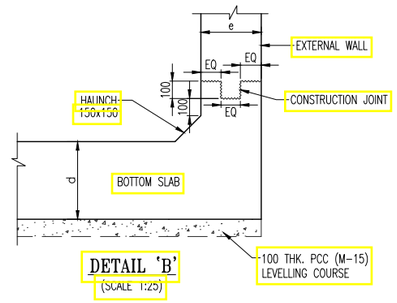

DETAIL 'B'
(SCALE 1:25)

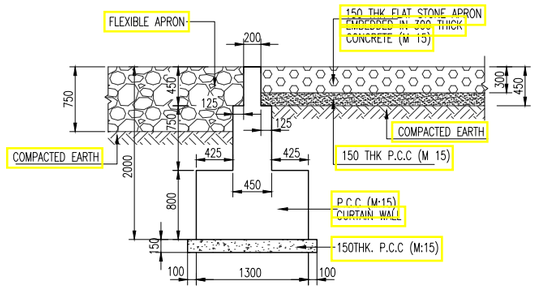

DETAILS OF CURTAIN WALL TYPE-II
(UP STREAM SIDE)

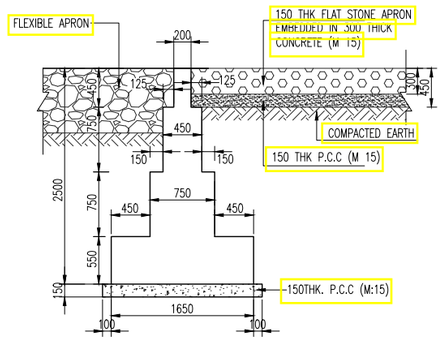

DETAILS OF CURTAIN WALL TYPE-I
(DOWN STREAM SIDE)

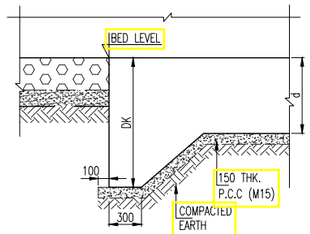

DETAIL '2'
SCALE (1:40)

LEGEND:

FRL : FINISHED ROAD LEVEL
GL : GROUND LEVEL
U/S : UP STREAM SIDE
D/S : DOWN STREAM SIDE
THK : THICKNESS

S.No	Existing Chainge	Design Chainge	Design FRL @ PCL	Camber e% (LHS)	Camber e% (RHS)	Flow direction	IL LHS (m)	IL RHS (m)	Proposed Structure Details				Cushion(m) (LHS) (ECL)	Cushion(m) (RHS) (ECR)	Lengths of Box (m)			Dimensions of Box (m)			Return Wall Length (LHS) (RTL)	Return Wall Length (RHS) (RTL)	Retaining Wall Length (RHS) (RWL)	Skew Angle (°)	TCS Type	Improvement Proposal
									Type of Structure	No of Spans	Clear Span (m) (a)	Clear Height (m) (b)			Lengths of Box (m) L	L1	L2	Top Slab (c)	Wall Ex (e)	Base Slab (d)						
1	0+680	0+680	549.987	-5.000	5.000	L-R	547.512	547.483	Box	1	2.0	2.0	0.000	0.557	14.30	7.85	6.45	0.25	0.25	0.30	0.55	0.55	3.20	0°	TCS-3A	Reconstruction

NOTES:
1. ALL DIMENSIONS ARE IN MILLIMETERS UNLESS OTHERWSE SPECIFIED.

REV	DATE	DESCRIPTION	DESIGNED	DRAWN	CHECKED	APPROVED

CLIENT:
HIMACHAL PRADESH ROAD AND OTHER INFRASTRUCTURE DEVELOPMENT CORPORATION LIMITED.

CONSULTANT:
SATRA SERVICES AND SOLUTIONS PVT.LTD.
#1-8-359 to 363, 4th Floor,Centre Point Building,SP Road, Begumpet, Secunderabad,Telangana – 500003, India.
Tel: +91 40 2784 0040, Fax: +91 40 2784 0050,
E-mail: info@satragroup.in, Web: www.satragroup.in

PROJECT:
HIMACHAL PRADESH STATE ROADS TRANSFORMATION PROJECT (HPSRTP)

SCALE: AS SHOWN
DATE

JOB No. : 01041055

DESIGNED	GANESH
DRAWN	SATYA
CHECKED	PRANAI
APPROVED	PRANAI

TITLE : TYPICAL GENERAL ARRANGEMENT DRAWING FOR RECONSTRUCTION OF SINGLE CELL BOX CULVERT (FOR TCS-3A)

REV. 0
SIZE : A3

DRAWING NO : HP/STR/BC/TYP/101

ROAD NAME : Package-IV:
Upgradation of Raghunathpura-Mandi-Harpura-Bharari Road in Bilaspur District from Km 0/000 to Km 2/740.

SHEET 2 OF 2

Z:\01041055-HPSRTP\04 Designs\02 Structures\02 Drawings\TENDER PURPOSE_21-12-2020\OSR-11\OSR-11-BC\1 HP-RAG-BHA-STR-BC-2+510-101-1 CELL-TCS-3A.dwg

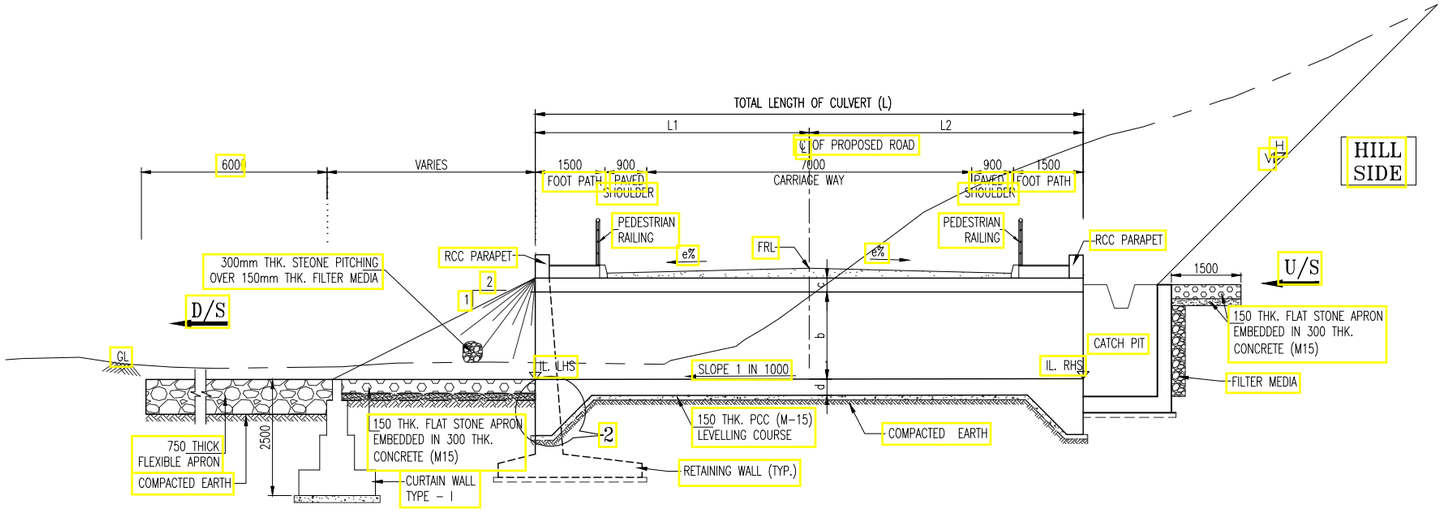

SECTIONAL ELEVATION AT A-A

(SCALE-1:100)

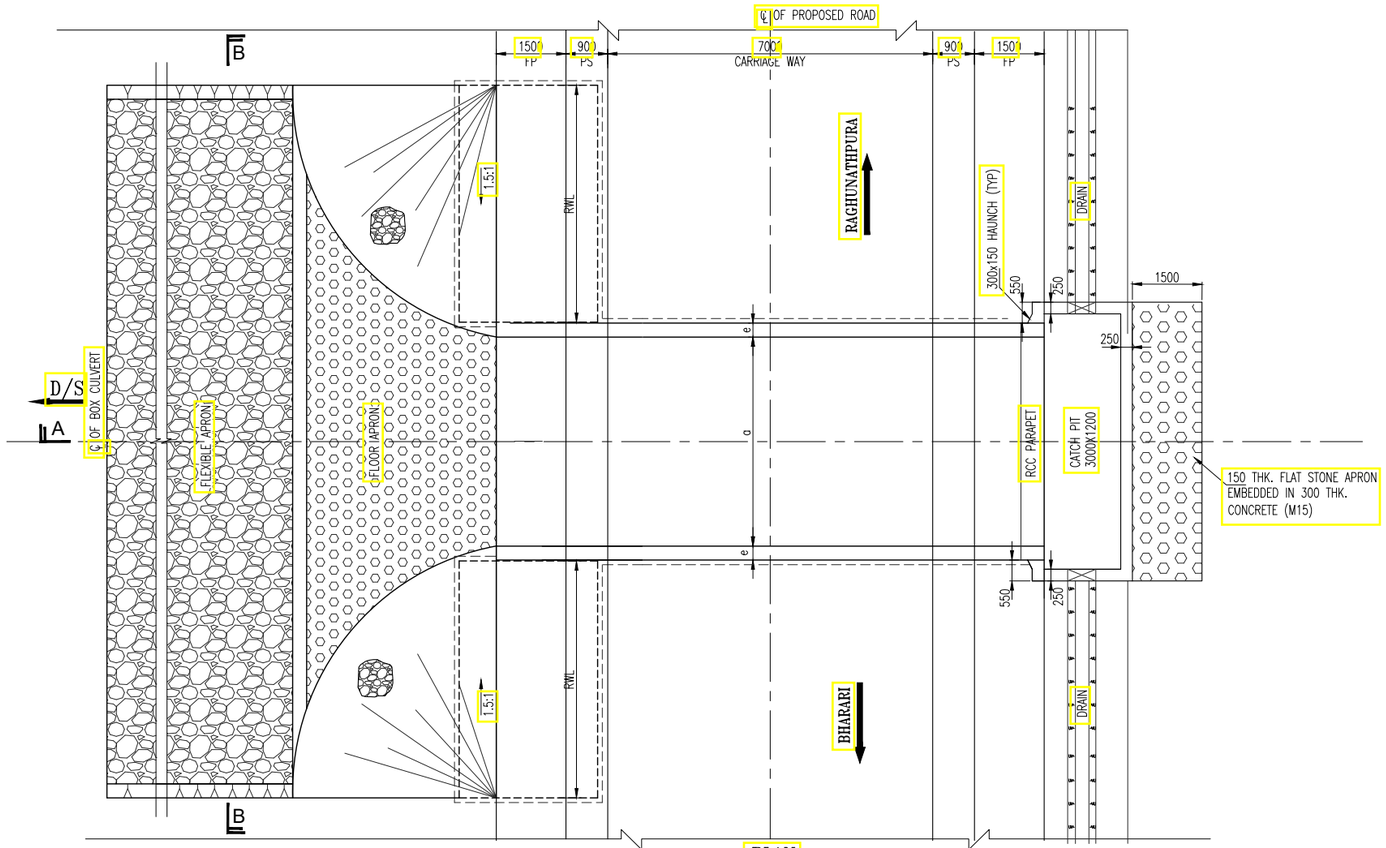

PLAN

(SCALE-1:100)

LEGEND:

FRL	:	FINISHED ROAD LEVEL
GL	:	GROUND LEVEL
IL	:	INVERT LEVEL
U/S	:	UP STREAM SIDE
D/S	:	DOWN STREAM SIDE
THK	:	THICKNESS
RWL	:	RETAINING WALL
RTL	:	RETURN WALL
ECL	:	EARTH CUSHION LEFT
ECR	:	EARTH CUSHION RIGHT

REFERENCE DRAWINGS:

1. REINFORCEMENT DETAILS OF BOX CULVERT – HP/RAG-BHA/STR/BC/TYP/201
2. MISCELLANEOUS DETAILS – HP/RAG-BHA/STR/MISC/601-606
3. RETAINING WALL DETAILS – HP/RAG-BHA/STR/MISC/608

NOTES:

1. ALL DIMENSIONS ARE IN MILLIMETRES AND LEVELS ARE IN METRES UNLESS MENTIONED OTHERWISE.
2. GRADE OF CONCRETE SHALL BE AS FOLLOWS.
   RC BOX – M30 RETAINING WALL – M30
   CURTAIN WALL, TOE WALL & LEVELING COURSE P.C.C – M15
3. CLEAR COVER FOR ANY REINFORCEMENT SHALL BE
   TOP SLAB – 40mm BOTTOM SLAB – 75mm SIDE WALL EARTH FACE – 75mm
   SIDE WALL OTHER FACE –40mm
4. GRANULAR BACK FILL MATERIAL CONFORMING TO IRC:78-2014 SHALL BE USED.
5. DIMENSIONS & LEVELS MAY VARY AS PER SITE CONDITIONS.
6. GRADE OF STEEL– Fe-500D SHALL CONFORM TO IS1786
7. ONLY WRITTEN DIMENSIONS ARE SHALL BE FOLLOWED,
   NO DIMENSION SHALL BE SCALED.
8. THIS DRAWING SHALL BE READ IN CONJUNCTION WITH RELEVANT HIGHWAY & STRUCTURAL DRAWINGS.
9. THE DIMENSIONS AND DETAILS ARE SUBJECTED TO MODIFICATION/ CORRECTION/ OMISSION DURING EXECUTION.
10. 'DK' IS DEPTH OF KEY AT BASE SALB.

FOR BASE SALB THICKNESS	VALUE OF "DK"
UPTO 900MM.	1200MM.
GREATER THAN 900MM	D+300MM.

D = BASE SLAB THICKNESS

NOTES:
1. ALL DIMENSIONS ARE IN MILLIMETERS UNLESS OTHERWISE SPECIFIED.

REV	DATE	DESCRIPTION	DESIGNED	DRAWN	CHECKED	APPROVED

CLIENT:
HIMACHAL PRADESH ROAD AND OTHER INFRASTRUCTURE DEVELOPMENT CORPORATION LIMITED.

CONSULTANT:
SATRA
SATRA SERVICES AND SOLUTIONS PVT.LTD.
#1-8-359 to 363, 4th Floor,Centre Point Building,SP Road, Begumpet, Secunderabad,Telangana – 500003, India.
Tel: +91 40 2784 0040, Fax: +91 40 2784 0050,
E-mail: info@satragroup.in, Web: www.satragroup.in

PROJECT:
HIMACHAL PRADESH STATE ROADS TRANSFORMATION PROJECT (HPSRTP)

SCALE: AS SHOWN
DATE

JOB No. : 01041055

DESIGNED	GANESH
DRAWN	SATYA
CHECKED	PRANAI
APPROVED	PRANAI

TITLE : TYPICAL GENERAL ARRANGEMENT DRAWING FOR NEW/RECONSTRUCTION OF SINGLE CELL BOX CULVERT (FOR TCS-3B)

REV. 0
SIZE : A3

DRAWING NO : HP/STR/BC/TYP/102

ROAD NAME : Package-IV:
Upgradation of Raghunathpura-Mandi-Harpura-Bharari Road in Bilaspur District from Km 0/000 to Km 2/740.

SHEET 1 OF 2

Z:\01041055-HPSRTP\04 Designs\02 Structures\02 Drawings\TENDER PURPOSE_21-12-2020\OSR-11\OSR-11-BC\1 HP-RAG-BHA-STR-BC-2+510-102-1 CELL-TCS-3B.dwg

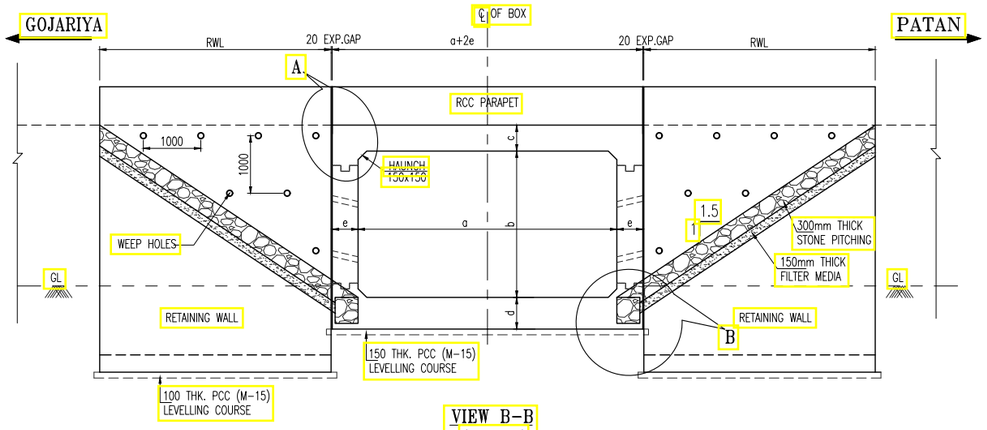

VIEW B-B
(SCALE 1:75)

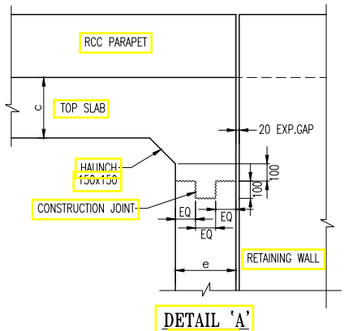

DETAIL 'A'
(SCALE 1:25)

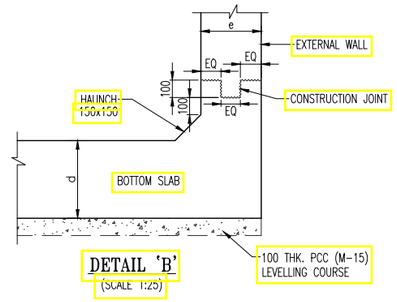

DETAIL 'B'
(SCALE 1:25)

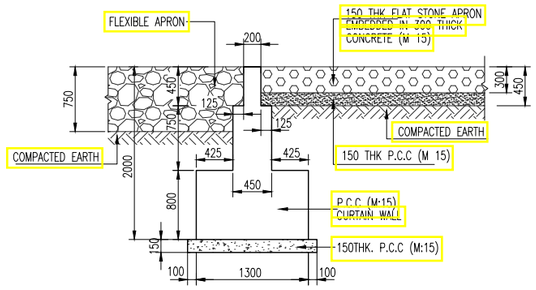

DETAILS OF CURTAIN WALL TYPE-II
(UP STREAM SIDE)

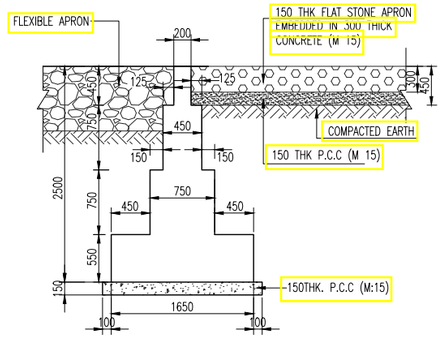

DETAILS OF CURTAIN WALL TYPE-I
(DOWN STREAM SIDE)

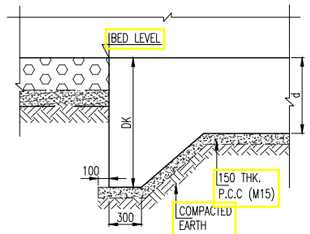

DETAIL '2'
SCALE (1:40)

LEGEND:

FRL : FINISHED ROAD LEVEL
GL : GROUND LEVEL
U/S : UP STREAM SIDE
D/S : DOWN STREAM SIDE
THK : THICKNESS

S.No	Existing Chainge	Design Chainge	Design FRL @ PCL	Camber e% (LHS)	Camber e% (RHS)	Flow direction	IL LHS (m)	IL RHS (m)	Proposed Structure Details				Cushion(m) (LHS) (ECL)	Cushion(m) (RHS) (ECR)	Lengths of Box (m)			Dimensions of Box (m)			Return Wall Length (LHS) (RTL)	Return Wall Length (RHS) (RTL)	Retaining Wall Length (RHS) (RWL)	Skew Angle (°)	TCS Type	Improvement Proposal
									Type of Structure	No of Spans	Clear Span (m) (a)	Clear Height (m) (b)			Lengths of Box (m) L	L1	L2	Top Slab (c)	Wall Ex (e)	Base Slab (d)						
1	New	0+284	566.30	-4.700	4.700	L-R	562.300	562.273	Box	1	2	3.0	0.364	1.025	13.50	7.05	6.45	0.30	0.30	0.35	0.55	0.55	4.70	0°	TCS-3B	New Construction
2	1+595	1+592	544.96	5.000	-5.000	L-R	542.900	542.871	Box	1	2	1.5	0.636	0.000	14.40	6.45	7.95	0.25	0.25	0.30	0.55	0.55	2.40	0°	TCS-3B	Reconstruction

NOTES:
1. ALL DIMENSIONS ARE IN MILLIMETERS UNLESS OTHERWSE SPECIFIED.

REV	DATE	DESCRIPTION	DESIGNED	DRAWN	CHECKED	APPROVED

CLIENT:
HIMACHAL PRADESH ROAD AND OTHER INFRASTRUCTURE DEVELOPMENT CORPORATION LIMITED.

CONSULTANT:
SATRA SERVICES AND SOLUTIONS PVT.LTD.
#1-8-359 to 363, 4th Floor,Centre Point Building,SP Road, Begumpet, Secunderabad,Telangana – 500003, India.
Tel: +91 40 2784 0040, Fax: +91 40 2784 0050,
E-mail: info@satragroup.in, Web: www.satragroup.in

PROJECT:
HIMACHAL PRADESH STATE ROADS TRANSFORMATION PROJECT (HPSRTP)

SCALE: AS SHOWN
DATE

JOB No. : 01041055
DESIGNED GANESH
DRAWN SATYA
CHECKED PRANAI
APPROVED PRANAI

TITLE : TYPICAL GENERAL ARRANGEMENT DRAWING FOR NEW/RECONSTRUCTION OF SINGLE CELL BOX CULVERT (FOR TCS-3B)

REV. 0
SIZE : A3

DRAWING NO : HP/STR/BC/TYP/101

ROAD NAME : Package-IV:
Upgradation of Raghunathpura-Mandi-Harpura-Bharari Road in Bilaspur District from Km 0/000 to Km 2/740.

SHEET 2 OF 2

Z:\01041055-HPSRTP\04 Designs\02 Structures\02 Drawings\TENDER PURPOSE_21-12-2020\OSR-11\OSR-11-BC\1 HP-RAG-BHA-STR-BC-2+510-102-1 CELL-TCS-3B.dwg

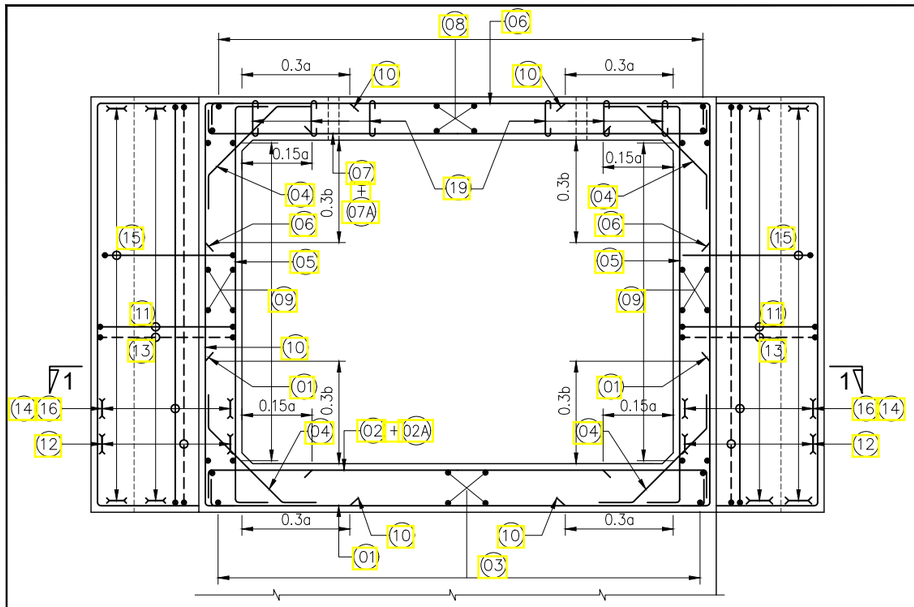

SECTION DETAILS OF BOX-1

SCALE 1:20

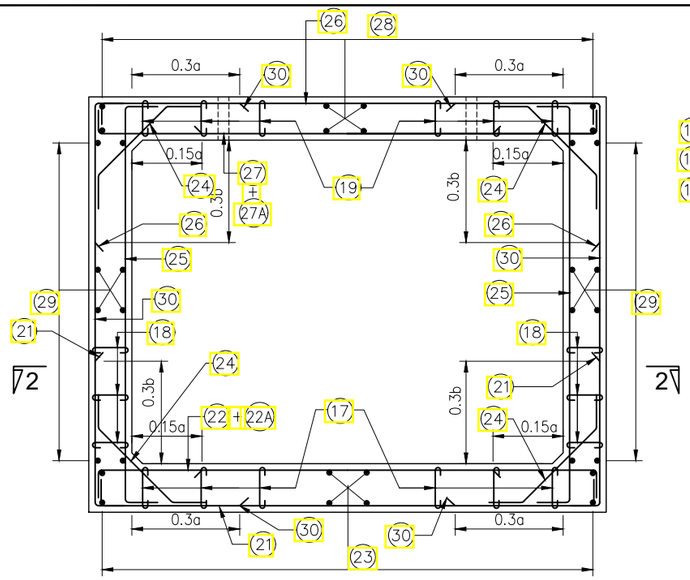

SECTION DETAILS OF BOX-2

SCALE 1:20

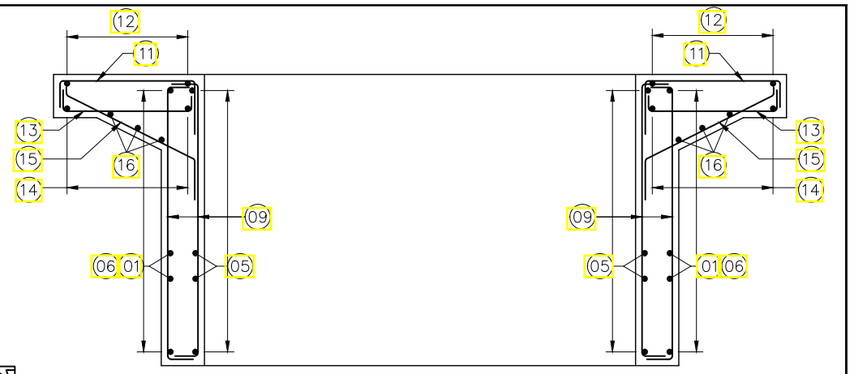

SECTION 1-1

SCALE 1:20

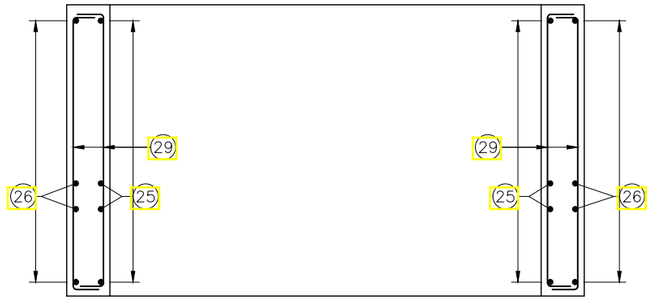

SECTION 2-2

SCALE 1:20

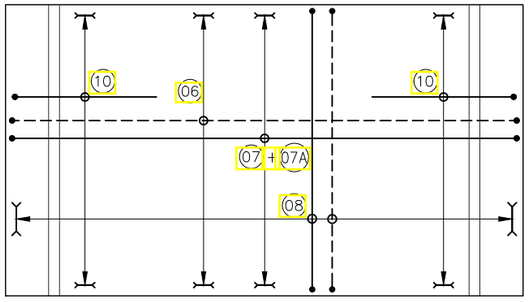

BOX TOP SLAB REINF. PLAN

(HAUNCH LINES NOT SHOWN IN PLAN)

(SCALE 1:25)

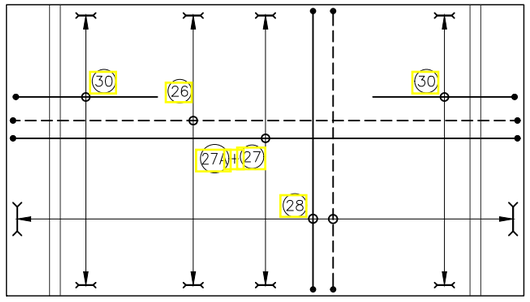

BOX TOP SLAB REINF. PLAN

(HAUNCH LINES NOT SHOWN IN PLAN)

SCALE 1:25

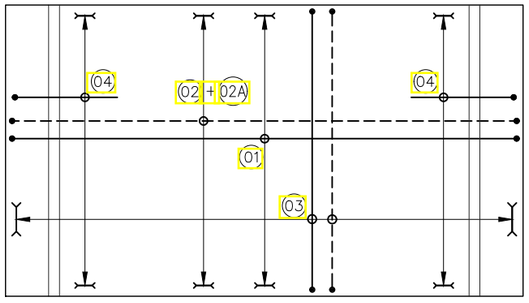

BOX BOTTOM SLAB REINF. PLAN

(HAUNCH LINES NOT SHOWN IN PLAN)

SCALE 1:25

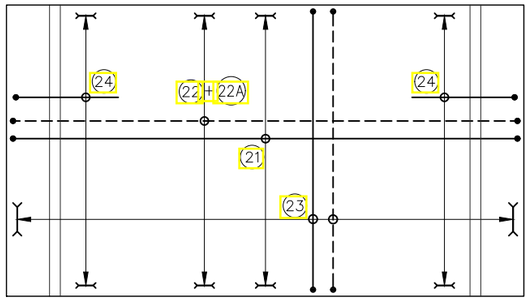

BOX BOTTOM SLAB REINF. PLAN

(HAUNCH LINES NOT SHOWN IN PLAN)

SCALE 1:25

NOTES

1. ALL DIMENSIONS ARE IN MILLIMETERS AND LEVELS IN METERS UNLESS OTHERWISE MENTIONED.
2. ONLY WRITTEN DIMENSIONS SHALL BE FOLLOWED. DRAWINGS SHALL NOT BE SCALED.
3. THE GRADE OF CONCRETE FOR
   RC BOX & RETAINING WALL : M30
   CRASH BARRIER : M40
4. CLEAR COVER TO REINFORCEMENT FOR
   SIDE WALL EARTH FACE : 75mm
   SIDE WALL OTHER FACE : 40mm.
   TOP SLAB : 40mm
   BOX BOTTOM SLAB : 75mm
   FLY WING WALL : 75mm
5. LAPS SHALL BE STAGGERED MINIMUM LAP LENGTH AND ANCHORAGE LENGTH SHALL BE AS PER IRC:112-2011
6. REINFORCEMENT BAR SHALL BE HYSD BARS (DENOTED BY Ø) OF GRADE Fe-500D AND CONFORMING TO IS -1786 :2000.
7. LAP LENGTH & DEVELOPMENT LENGTH SHALL BE

FOR HYSD BARS Fe 500 & Fe 500D Ø ≤ 32mm

CONCRETE GRADE Mpa	M20	M25	M30	M35	M40	M45	M50
DEVELOPMENT LENGTH	54Ø	47Ø	40Ø	36Ø	34Ø	32Ø	29Ø
LAP LENGTH > 50% LAPPED BARS	81Ø	70.5Ø	60Ø	54Ø	51Ø	48Ø	43.5Ø

NOTES:
1. ALL DIMENSIONS ARE IN MILLIMETERS UNLESS OTHERWISE SPECIFIED.

REV	DATE	DESCRIPTION	DESIGNED	DRAWN	CHECKED	APPROVED

CLIENT:

HIMACHAL PRADESH ROAD AND OTHER INFRASTRUCTURE DEVELOPMENT CORPORATION LIMITED.

CONSULTANT:

SATRA SERVICES AND SOLUTIONS PVT.LTD.
#1-8-359 to 363, 4th Floor,Centre Point Building,SP Road, Begumpet, Secunderabad,Telangana – 500003, India.
Tel: +91 40 2784 0040, Fax: +91 40 2784 0050,
E-mail: info@satragroup.in, Web: www.satragroup.in

PROJECT:

HIMACHAL PRADESH STATE ROADS TRANSFORMATION PROJECT (HPSRTP)

SCALE: AS SHOWN

DATE

JOB No. : 01041055

DESIGNED	GANESH
DRAWN	SATYA
CHECKED	PRANAI
APPROVED	PRANAI

TITLE : TYPICAL REINFORCEMENT DETAILS FOR SINGLE CELL BOX CULVERTS

REV. 0

SIZE : A3

DRAWING NO : HP/STR/BC/TYP/201

ROAD NAME : Package-IV: Upgradation of Raghunathpura-Mandi-Harpura-Bharari Road in Bilaspur District from Km 0/000 to Km 2/740.

SHEET 01 OF 04

Z:\01041055-HPSRTP\04 Designs\02 Structures\02 Drawings\TENDER PURPOSE_21-12-2020\OSR-11\OSR-11-BC\HP-RAG-BHA-STR-BC-TYP-201-1 CELL-TCS-1.dwg

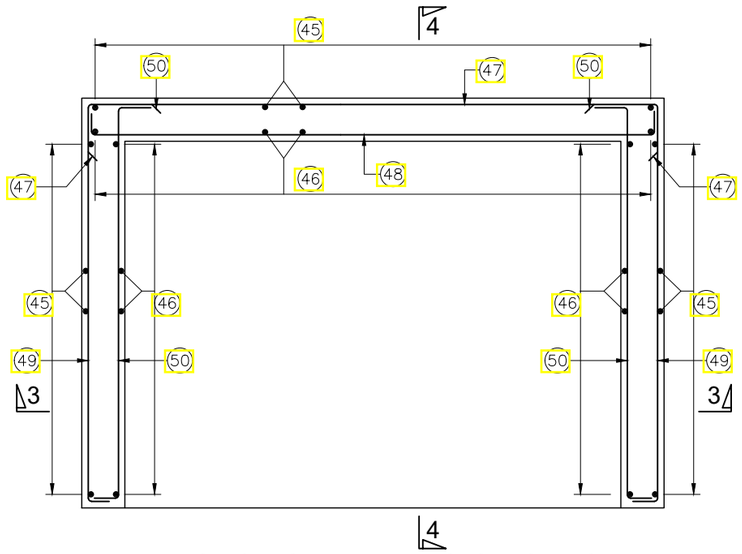

SECTION DETAILS OF CATCH PIT

SCALE 1:20

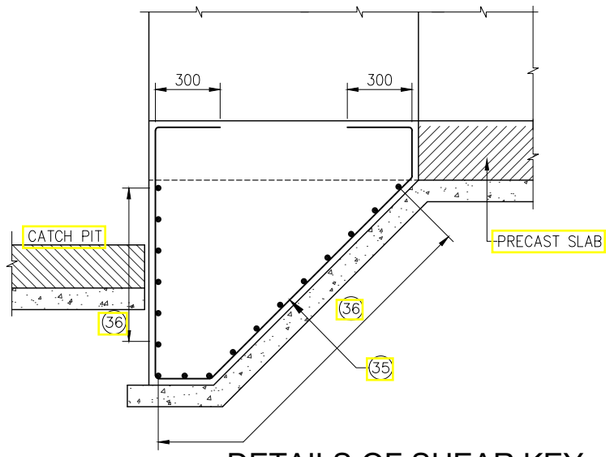

DETAILS OF SHEAR KEY

SCALE 1:20

BAR BENDING SCHEDULE CATCH PIT		
41	125	ϕ10 @ 150 c/c
42	125	ϕ10 @ 150 c/c
43	125	ϕ8 @ 200 c/c
44	125	ϕ8 @ 200 c/c
45	125 / 300	ϕ12 @ 150 c/c
46	125 / 300	ϕ10 @ 150 c/c
47	300	ϕ8 @ 200 c/c
48	300 / 125	ϕ8 @ 200 c/c
49	300 / 125	ϕ8 @ 200 c/c
50	125 / 300	ϕ8 @ 200 c/c
51	300 / 300	ϕ10 @ 250 c/c
52	300	ϕ8 @ 200 c/c

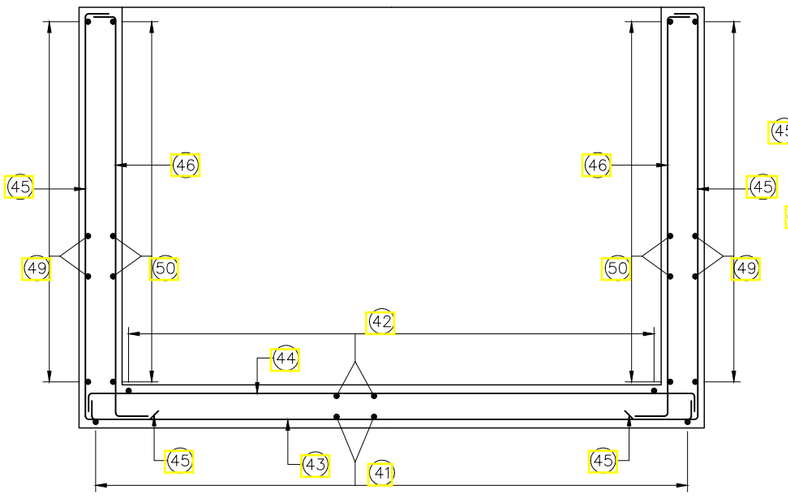

SECTION 3-3

SCALE 1:20

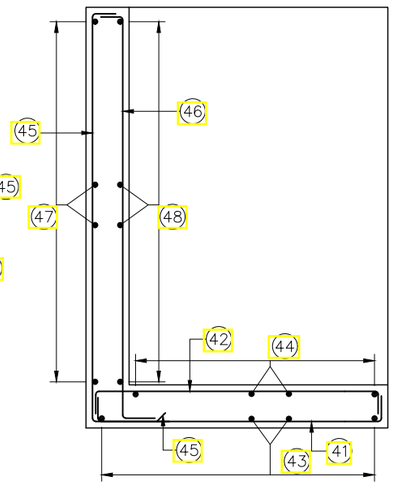

SECTION 4-4

SCALE 1:20

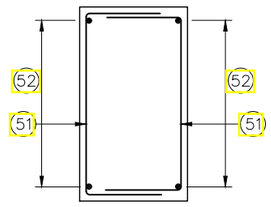

PCC PARAPET

SCALE 1:20

** FOR REINFORCEMENT DETAILS REFER BAR BENDING SCHEDULE OF CATCH PIT

NOTES:
1. ALL DIMENSIONS ARE IN MILLIMETERS UNLESS OTHERWISE SPECIFIED.

REV	DATE	DESCRIPTION	DESIGNED	DRAWN	CHECKED	APPROVED

CLIENT:

HIMACHAL PRADESH ROAD AND OTHER INFRASTRUCTURE DEVELOPMENT CORPORATION LIMITED.

CONSULTANT:

SATRA

SATRA SERVICES AND SOLUTIONS PVT.LTD.
#1-8-359 to 363, 4th Floor,Centre Point Building,SP Road, Begumpet, Secunderabad,Telangana – 500003, India.
Tel: +91 40 2784 0040, Fax: +91 40 2784 0050,
E-mail: info@satragroup.in, Web: www.satragroup.in

PROJECT:

HIMACHAL PRADESH STATE ROADS TRANSFORMATION PROJECT (HPSRTP)

SCALE: AS SHOWN

DATE

JOB No. : 01041055

DESIGNED	GANESH	
DRAWN	SATYA	
CHECKED	PRANAI	
APPROVED	PRANAI	

TITLE : TYPICAL REINFORCEMENT DETAILS FOR SINGLE CELL BOX CULVERTS

REV. 0

SIZE : A3

DRAWING NO : HP/STR/ BC/TYP/201

ROAD NAME : Package-IV: Upgradation of Raghunathpura-Mandi-Harpura-Bharari Road in Bilaspur District from Km 0/000 to Km 2/740.

SHEET 02 OF 04

Z:\01041055-HPSRTP\04 Designs\02 Structures\02 Drawings\TENDER PURPOSE_21-12-2020\OSR-11\OSR-11-BC\HP-RAG-BHA-STR-BC-TYP-201-1 CELL-TCS-1.dwg

BAR BENDING SCHEDULE

1x2x1.5–UPTO 0.6m FILL (BOX–1)

BAR NO	BAR SHAPE	REINFORCEMENT
01	150	ϕ12@200c/c
02	125	ϕ12@200c/c
02A		ϕ12@200c/c
03	125	ϕ10@200c/c
04	200, 200	ϕ10@200c/c
05	125, 125	ϕ12@200c/c
06		ϕ12@200c/c
07	125	ϕ12@200c/c
07A		ϕ12@200c/c
08	125	ϕ10@200c/c
09	125	ϕ10@200c/c
10		ϕ12@200c/c
11	125, 300	ϕ10@200c/c
12	125, 125	ϕ10@200c/c
13	125	ϕ10@200c/c
14	125, 125	ϕ10@200c/c
15	125, 300	ϕ10@200c/c
16	125, 125	ϕ10@200c/c
17		ϕ8–2L@100c/c
18		NOT USED
19		ϕ10 LINKS @250c/c

BAR BENDING SCHEDULE

1x2x1.5–UPTO 0.6m FILL (BOX–1)

BAR NO	BAR SHAPE	REINFORCEMENT
21	150	ϕ12@200c/c
22	125	ϕ12@200c/c
22A		ϕ12@200c/c
23	125	ϕ10@200c/c
24	200, 200	ϕ10@200c/c
25	125, 125	ϕ12@200c/c
26		ϕ12@200c/c
27	125	ϕ12@200c/c
27A		ϕ12@200c/c
28	125	ϕ10@200c/c
29	125	ϕ10@200c/c
30		ϕ12@200c/c
SHEAR KEY		
35	300, 300	ϕ10@250c/c
36	125	ϕ8@200c/c

BAR BENDING SCHEDULE

1x2x2–UPTO 0.6m FILL (BOX–1)

BAR NO	BAR SHAPE	REINFORCEMENT
01	150	ϕ12@200c/c
02	125	ϕ12@200c/c
02A		ϕ12@200c/c
03	125	ϕ10@200c/c
04	200, 200	ϕ10@200c/c
05	125, 125	ϕ12@200c/c
06		ϕ12@200c/c
07	125	ϕ12@200c/c
07A		ϕ12@200c/c
08	125	ϕ10@200c/c
09	125	ϕ10@200c/c
10		ϕ12@200c/c
11	125, 300	ϕ10@200c/c
12	125, 125	ϕ10@200c/c
13	125	ϕ10@200c/c
14	125, 125	ϕ10@200c/c
15	125, 300	ϕ10@200c/c
16	125, 125	ϕ10@200c/c
17		ϕ8–2L@100c/c
18		NOT USED
19		ϕ10 LINKS @250c/c

BAR BENDING SCHEDULE

1x2x2–UPTO 0.6m FILL (BOX–1)

BAR NO	BAR SHAPE	REINFORCEMENT
21	150	ϕ12@200c/c
22	125	ϕ12@200c/c
22A		ϕ12@200c/c
23	125	ϕ10@200c/c
24	200, 200	ϕ10@200c/c
25	125, 125	ϕ12@200c/c
26		ϕ12@200c/c
27	125	ϕ12@200c/c
27A		ϕ12@200c/c
28	125	ϕ10@200c/c
29	125	ϕ10@200c/c
30		ϕ12@200c/c
SHEAR KEY		
35	300, 300	ϕ10@250c/c
36	125	ϕ8@200c/c

NOTES:
1. ALL DIMENSIONS ARE IN MILLIMETERS UNLESS OTHERWISE SPECIFIED.

REV	DATE	DESCRIPTION	DESIGNED	DRAWN	CHECKED	APPROVED

CLIENT:
HIMACHAL PRADESH ROAD AND OTHER INFRASTRUCTURE DEVELOPMENT CORPORATION LIMITED.

CONSULTANT:
SATRA SERVICES AND SOLUTIONS PVT.LTD.
#1-8-359 to 363, 4th Floor,Centre Point Building,SP Road, Begumpet, Secunderabad,Telangana – 500003, India.
Tel: +91 40 2784 0040, Fax: +91 40 2784 0050,
E-mail: info@satragroup.in, Web: www.satragroup.in

PROJECT:
HIMACHAL PRADESH STATE ROADS TRANSFORMATION PROJECT (HPSRTP)

SCALE: AS SHOWN
DATE

JOB No. : 01041055

DESIGNED	GANESH	
DRAWN	SATYA	
CHECKED	PRANAI	
APPROVED	PRANAI	

TITLE : TYPICAL REINFORCEMENT DETAILS FOR SINGLE CELL BOX CULVERTS

REV. 0
SIZE : A3

DRAWING NO : HP/STR/BC/TYP/201

ROAD NAME : Package-IV:
Upgradation of Raghunathpura-Mandi-Harpura-Bharari Road in Bilaspur District from Km 0/000 to Km 2/740.

SHEET 03 OF 04

Z:\01041055-HPSRTP\04 Designs\02 Structures\02 Drawings\TENDER PURPOSE_21-12-2020\OSR-11\OSR-11-BC\HP-RAG-BHA-STR-BC-TYP-201-1 CELL-TCS-1.dwg

BAR BENDING SCHEDULE

1x2x3.0–1.0m FILL (BOX–1)

BAR NO	BAR SHAPE	REINFORCEMENT
01	150	ϕ16@200c/c
02	125	ϕ16@200c/c
02A		ϕ12@200c/c
03	125	ϕ10@150c/c
04	200, 200	ϕ10@200c/c
05	125, 125	ϕ16@200c/c
06	150	ϕ12@200c/c
07	125	ϕ12@200c/c
07A		ϕ12@200c/c
08	125	ϕ10@150c/c
09	125	ϕ10@150c/c
10	500, 500	ϕ16@200c/c
11	125, 300	ϕ10@150c/c
12	125, 125	ϕ10@150c/c
13	125	ϕ10@250c/c
14	125, 125	ϕ8@150c/c
15	125, 300	ϕ10@250c/c
16	125, 125	ϕ8@200c/c
17		ϕ8–1L @200c/c IN L–L &200c/c IN T–T
18		NOT USED
19		ϕ8–1L @200c/c IN L–L &200c/c IN T–T

BAR BENDING SCHEDULE

1x2x3.0–1.0m FILL (BOX–1)

BAR NO	BAR SHAPE	REINFORCEMENT
21	150	ϕ16@200c/c
22	125	ϕ16@200c/c
22A		ϕ12@200c/c
23	125	ϕ10@150c/c
24	200, 200	ϕ10@200c/c
25	125, 125	ϕ16@200c/c
26	600	ϕ12@200c/c
27	125	ϕ12@200c/c
27A		ϕ12@200c/c
28	125	ϕ10@150c/c
29	125	ϕ10@150c/c
30	500, 500	ϕ16@200c/c
SHEAR KEY		
35	300, 300	ϕ10@250c/c
36	125	ϕ8@200c/c

NOTES:
1. ALL DIMENSIONS ARE IN MILLIMETERS UNLESS OTHERWISE SPECIFIED.

REV	DATE	DESCRIPTION	DESIGNED	DRAWN	CHECKED	APPROVED

CLIENT:
HIMACHAL PRADESH ROAD AND OTHER INFRASTRUCTURE DEVELOPMENT CORPORATION LIMITED.

CONSULTANT:
SATRA SERVICES AND SOLUTIONS PVT.LTD.
#1-8-359 to 363, 4th Floor,Centre Point Building,SP Road, Begumpet, Secunderabad,Telangana – 500003, India.
Tel: +91 40 2784 0040, Fax: +91 40 2784 0050,
E-mail: info@satragroup.in, Web: www.satragroup.in

PROJECT:
HIMACHAL PRADESH STATE ROADS TRANSFORMATION PROJECT (HPSRTP)

SCALE: AS SHOWN
DATE

JOB No. : 01041055

DESIGNED	GANESH	
DRAWN	SATYA	
CHECKED	PRANAI	
APPROVED	PRANAI	

TITLE : TYPICAL REINFORCEMENT DETAILS FOR SINGLE CELL BOX CULVERTS

REV. 0
SIZE : A3

DRAWING NO : HP/STR/BC/TYP/201

ROAD NAME : Package-IV:
Upgradation of Raghunathpura-Mandi-Harpura-Bharari Road in Bilaspur District from Km 0/000 to Km 2/740.

SHEET 04 OF 04

Z:\01041055-HPSRTP\04 Designs\02 Structures\02 Drawings\TENDER PURPOSE_21-12-2020\OSR-11\OSR-11-BC\HP-RAG-BHA-STR-BC-TYP-201-1 CELL-TCS-1.dwg

SLAB CULVERTS

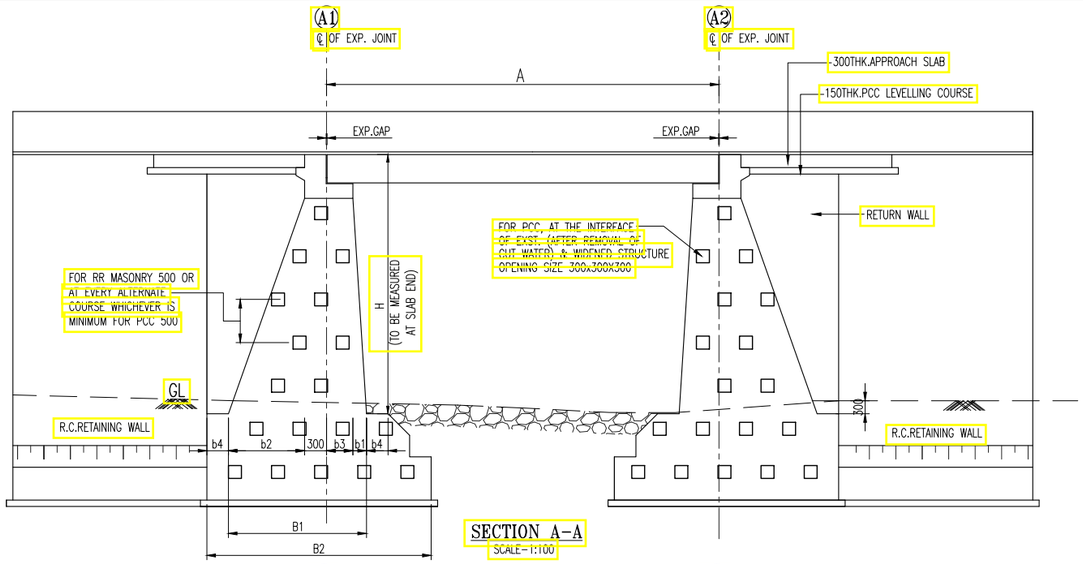

SECTION A-A
SCALE-1:100

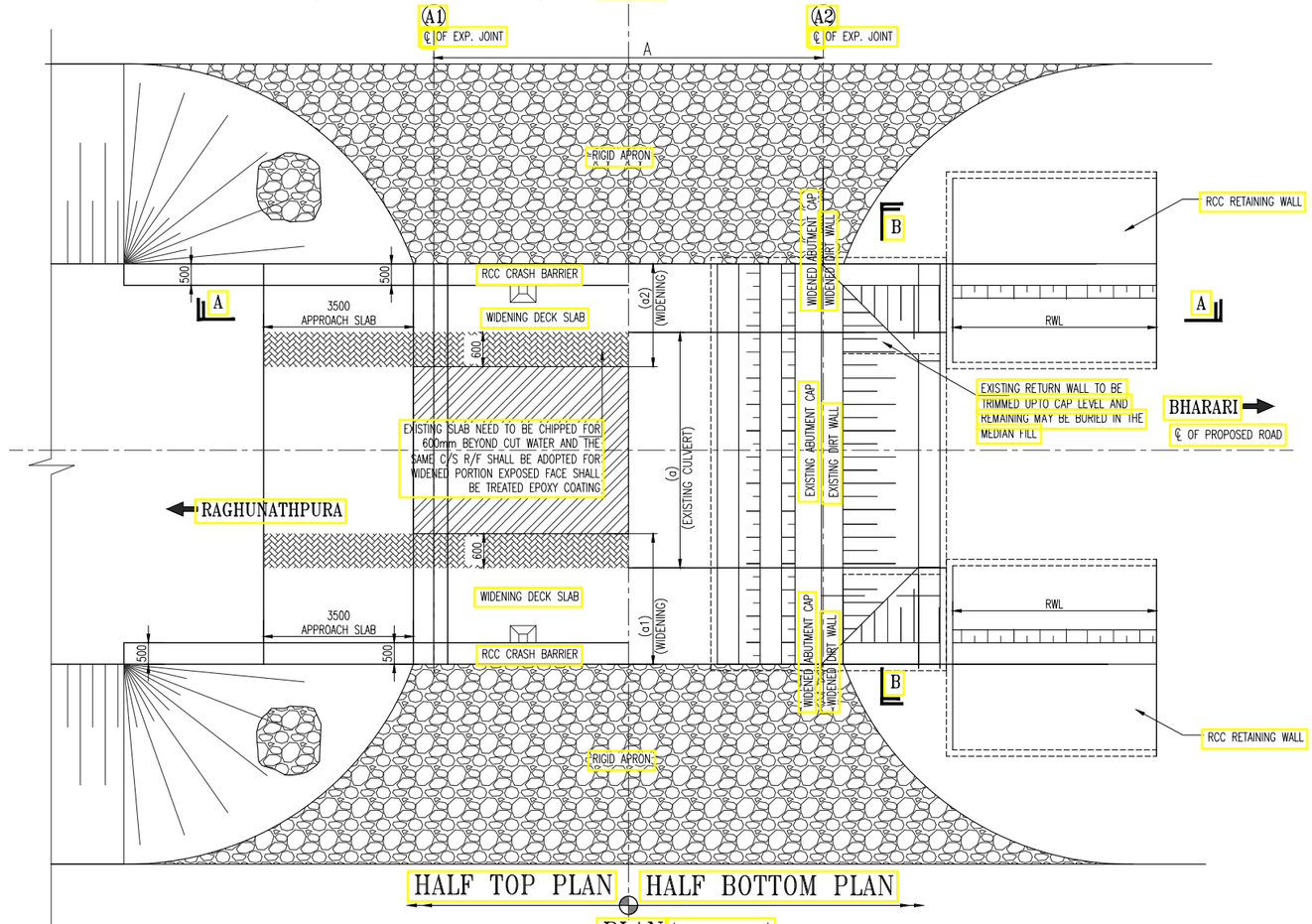

PLAN (SCALE-1:150)

NOTES:
1. ALL DIMENSIONS ARE IN MILLIMETERS UNLESS OTHERWISE SPECIFIED.

REV	DATE	DESCRIPTION	DESIGNED	DRAWN	CHECKED	APPROVED

CLIENT:
HIMACHAL PRADESH ROAD AND OTHER INFRASTRUCTURE DEVELOPMENT CORPORATION LIMITED.

CONSULTANT:
SATRA
SATRA SERVICES AND SOLUTIONS PVT.LTD.
#1-8-359 to 363, 4th Floor,Centre Point Building,SP Road, Begumpet, Secunderabad,Telangana – 500003, India.
Tel: +91 40 2784 0040, Fax: +91 40 2784 0050,
E-mail: info@satragroup.in, Web: www.satragroup.in

PROJECT:
HIMACHAL PRADESH STATE ROADS TRANSFORMATION PROJECT (HPSRTP)

SCALE: AS SHOWN
DATE

JOB No. : 01041055

DESIGNED	GANESH	
DRAWN	SATYA	
CHECKED	PRANAI	
APPROVED	PRANAI	

TITLE : TYPICAL GENERAL ARRANGEMENT DRAWING FOR WIDENING OF SLAB CULVERT (FOR TCS-3B)

REV. 0
SIZE : A3

DRAWING NO : HP/STR/SC/TYP/101

ROAD NAME : Package-IV:
Upgradation of Raghunathpura-Mandi-Harpura-Bharari Road in Bilaspur District from Km 0/000 to Km 2/740.

SHEET 01 OF 02

C:\Users\satyanarayanac\appdata\local\temp\AcPublish_15496\HP-RAG-BHA-STR-SC-TYP-WIDEN-101-TCS-3B.dwg

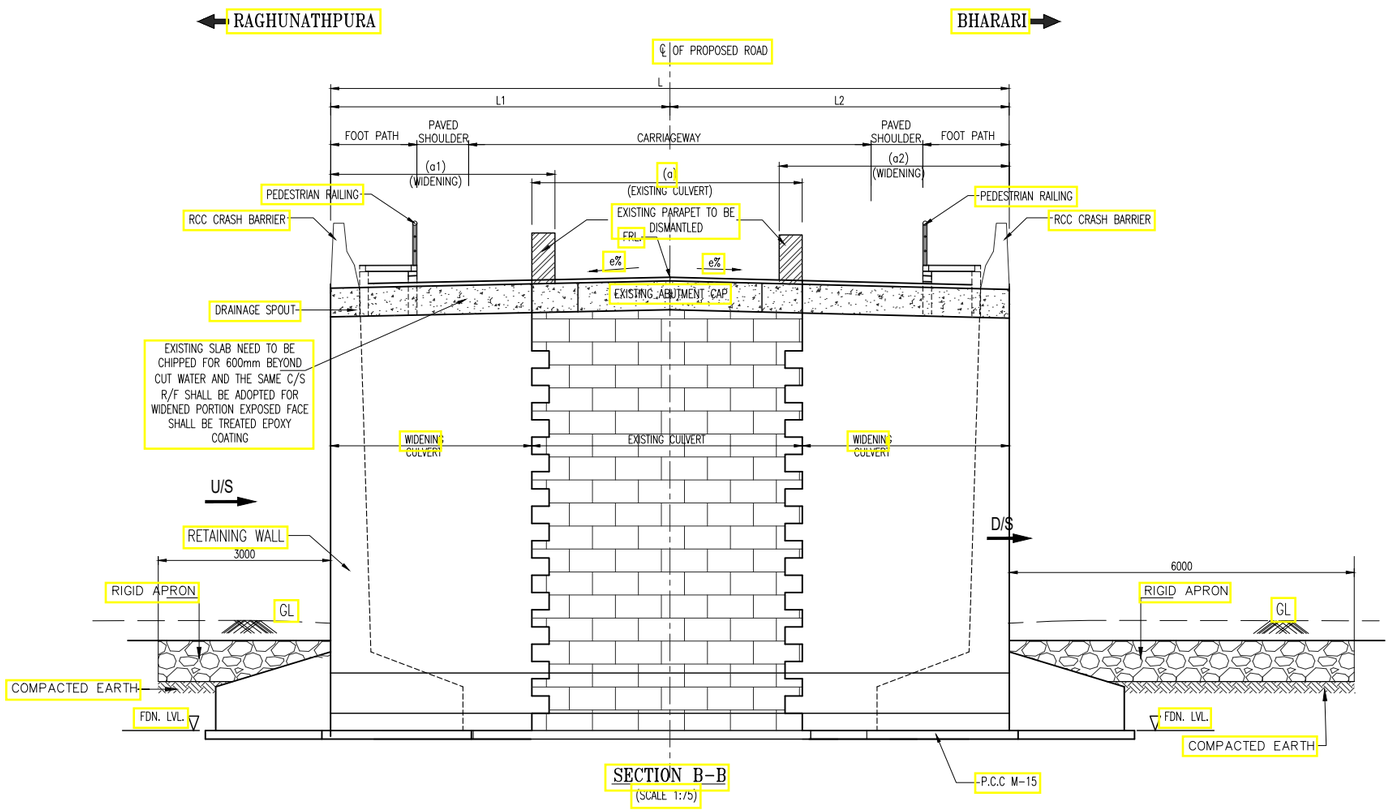

SECTION B-B
(SCALE 1:75)

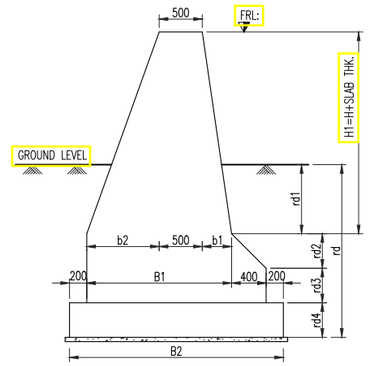

RETURN WALL SECTION
(SCALE 1:100)

LEGEND:

FRL : FINISHED ROAD LEVEL
GL : GROUND LEVEL
THK : THICKNESS
FDN : FOUNDING LEVEL

NOTES:

1. ALL WIDENING OF FOUNDATION, SUBSTRUCTURE AND SUPER STRUCTURE WAS DONE BY KIND AND MONOLITHICALLY. PROPOSED APPROACH SLAB SHALL BE ANCHORED WITH THE EXISTING ONE AS PER SITE CONDITION.
2. R.R.MASONRY/PCC WING WALL DISMANTLED AND REPLACED BY RCC RETAINING WALL. FOR DIMENSION AND REINFORCEMENT VIDE RELEVANT DRAWING. PCC STRAIGHT RETURN DISMANTLED UPTO CAP LEVEL AND REMAINING MAY BE BURIED AS PER SITE CONDITION.
3. KEY STONES FROM RR MASONRY ABUTMENT WALL AND PIER REMOVED TO PROVIDE SHEAR KEY AS SHOWN IN THE SECTIONAL ELEVATION FROM PREPARED INTERFACE OF FOUNDATION AND SUBSTRUCTURE . FOR PCC ABUTMENT AND PIERS RECESSES WERE SCOOPED OUT FROM PREPARED SURFACE OF EXISTING STEMS AND FOUNDATIONS AS SHEAR KEYS FOR MECHANICAL BONDING BETWEEN EXISTING AND PROPOSED STRUCTURE AS SHOWN IN THE SECTIONAL ELEVATION AND CROSS-SECTIONS.
4. APPROVED EPOXY BONDING AGENT E.G. CONCRESIVE 1414 OR OTHER APPLIED AT THE INTERFACE PRIOR TO PLACEMENT OF CONCRETE IN THE WIDENED PART IN ACCORDANCE WITH MANUFACTURER'S SPECIFICATION IN CASE OF CONCRETE TO CONCRETE WIDENING.
5. THE SHAPE OF BURIED COMPONENTS OF ABUTMENT AND PIER FOUNDATIONS SHOWN IN THIS DRAWING ARE ASSUMED. THE DIMENSIONS OF DIFFERENT COMPONENTS IN THE WIDENED PART SHALL BE ADOPTED THE SAME AS THAT OF THE EXISTING STRUCTURE, AFTER THEY ARE EXPOSED BY EXCAVATION.
6. WIDENING OF ABUTMENT MAY BE DONE BY PCC/RCC AS THE CASE MAY BE IN ACCORDANCE WITH APPLICABLE SPECIFICATIONSS. THE GRADES OF CONCRETE SHALL BE AS UNDER :
   a. SUPERSTRUCTURE – M 25 GRADE OF CONCRETE.
   b. SUBSTRUCTURE FOR ABUTMENT AND WINGWALL – M 20 GRADE OF CONCRETE.
   c. LEVELLING COURSE – M15 GRADE OF CONCRETE.
7. FLOOR PROTECTION IF NEEDED WAS PROVIDED AS PER SITE CONDITIONS AND / OR AS DIRECTED BY THE ENGINEER-IN-CHARGE.
8. THE WIDENED BRIDGE IS CAPABLE OF SAFE WITHSTANDING 1 LANE OF IRC CLASS 70 R + 1 LANE OF CLASS A OR 3 LANES OF CLASS A LOADING, WHICHEVER IS SEVERER,
9. APPROACH SLAB WAS CONSTRUCTED FOR THE WIDENED PART OF THE STRUCTURE.
10. ALL UNTENSIONED REINFORCEMENT GRADE DESIGNATION S-500 HAVING YIELD STRENGTH OF 500 Mpa, CONFORMING TO IS:1786 STANDARD.
11. CLEAR COVER TO REINFORCEMENT IS 40 MM.
12. THE BACK FILL BEHIND THE ABUTMENT OF SLAB CULVERT WAS FILLED WITH GRANULAR MATERIAL AS PER CLAUSE 401.4.2.
13. WEEP HOLES 100 DIA, SPACED AT 1000 c/c BOTH HORIZONTALLY AND VERTICALLY WAS PROVIDED IN A STAGGERED MANNER IN ABUTMENT WALL, RETURN WALLS & MEDIAN WALLS FROM FLOOR LEVEL UPTO THE ENTIRE HEIGHT OF ABUTMENTS AND RETAINING WALLS.
14. 600 THK. FILTER MEDIA WAS PROVIDED BEHIND THE ENTIRE LENGTH OF ABUTMENT AND WING WALLS WITH LOWER SIZE AGGREGATES TOWARDS THE FILL IN ACCORDANCE WITH APPLICABLE SPECIFICATION.
15. THIS DRAWING READ IN CONJUNCTION WITH THE RELEVANT DRAWINGS.
16. WIDENING SHALL BE DONE BY KIND AND SHALL BE MADE INTEGRAL WITH THE EXISTING FOUNDATION AND SUBSTRUCTURES BY ANCHORING DOWEL BARS AND SUPERSTRUCTURE SHALL BE MONOLITHIC WITH EXISTING SUPERSTRUCTURE.

S. No.	Existing Chainage (Km)	Design Chainage (km)	Design FRL (m)	Proposed Structure Details				Slab Thickness (t) (m)	Lengths of Box (m)						Abutment Section							Return wall Section					
				Type of Structure	No of Spans	Span (m) (A)	Clear Height (m)		L	L1	L2	a	a1	a2	H	B1	B2	b1	b2	b3	b4	H1	B1	B2	b1	b2	RWL
1	1+090	1+091	546.500	Slab	1	3	1.5	0.30	13.90	6.15	7.75	8.00	2.15	3.75	1.5	1.5	2.7	0.2	0.7	0.3	-	1.8	1.33	2.13	0.24	0.59	2.7

NOTES:
1. ALL DIMENSIONS ARE IN MILLIMETERS UNLESS OTHERWSE SPECIFIED.

REV	DATE	DESCRIPTION	DESIGNED	DRAWN	CHECKED	APPROVED

CLIENT:
HIMACHAL PRADESH ROAD AND OTHER INFRASTRUCTURE DEVELOPMENT CORPORATION LIMITED.

CONSULTANT:
SATRA SERVICES AND SOLUTIONS PVT.LTD.
#1-8-359 to 363, 4th Floor,Centre Point Building,SP Road, Begumpet, Secunderabad,Telangana – 500003, India.
Tel: +91 40 2784 0040, Fax: +91 40 2784 0050,
E-mail: info@satragroup.in, Web: www.satragroup.in

PROJECT:
HIMACHAL PRADESH STATE ROADS TRANSFORMATION PROJECT (HPSRTP)

SCALE: AS SHOWN
DATE

JOB No. : 01041055

DESIGNED	GANESH	
DRAWN	SATYA	
CHECKED	PRANAI	
APPROVED	PRANAI	

TITLE : TYPICAL GENERAL ARRANGEMENT DRAWING FOR WIDENING OF SLAB CULVERT (FOR TCS-3B)

REV. 0
SIZE : A3

DRAWING NO : HP/STR/SC/TYP/101

ROAD NAME : Package-IV:
Upgradation of Raghunathpura-Mandi-Harpura-Bharari Road in Bilaspur District from Km 0/000 to Km 2/740.

SHEET 02 OF 02

C:\Users\satyanarayana\appdata\local\temp\AcPublish_15496\HP-RAG-BHA-STR-SC-TYP-WIDEN-101-TCS-3B.dwg

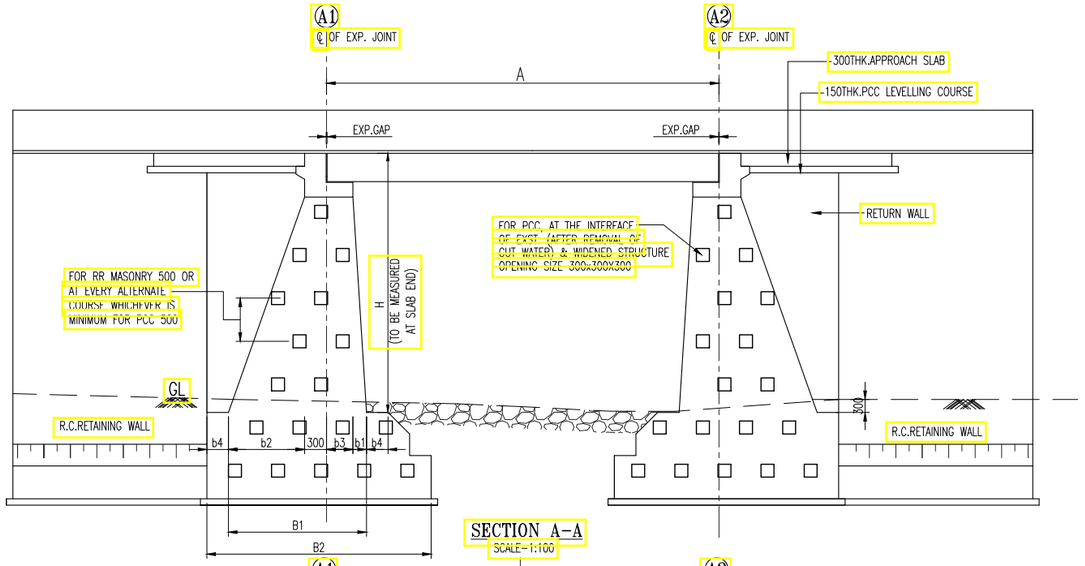

SECTION A-A
SCALE-1:100

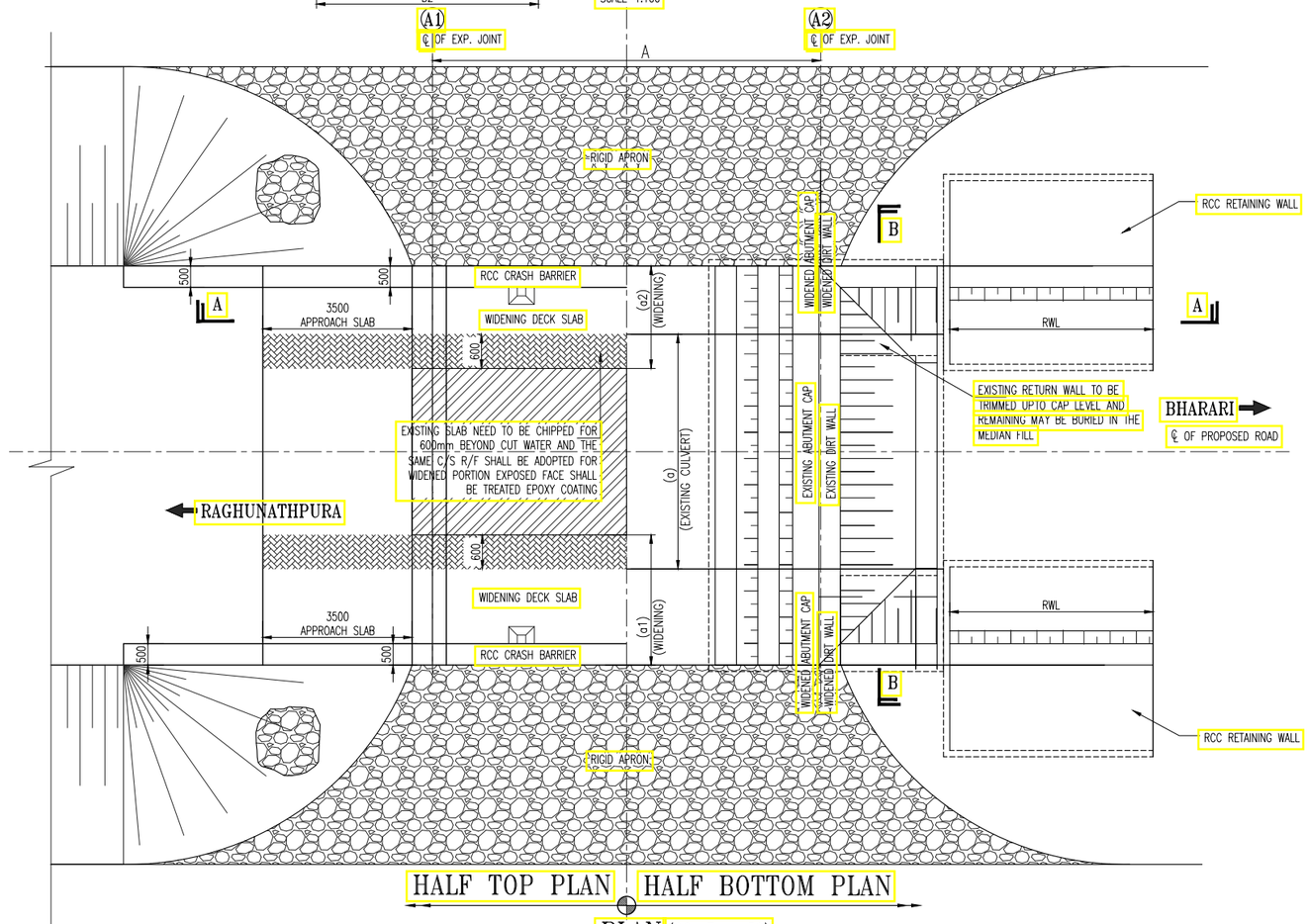

PLAN (SCALE-1:150)

NOTES:
1. ALL DIMENSIONS ARE IN MILLIMETERS UNLESS OTHERWISE SPECIFIED.

REV	DATE	DESCRIPTION	DESIGNED	DRAWN	CHECKED	APPROVED

CLIENT:
HIMACHAL PRADESH ROAD AND OTHER INFRASTRUCTURE DEVELOPMENT CORPORATION LIMITED.

CONSULTANT:
SATRA
SATRA SERVICES AND SOLUTIONS PVT.LTD.
#1-8-359 to 363, 4th Floor,Centre Point Building,SP Road, Begumpet, Secunderabad,Telangana – 500003, India.
Tel: +91 40 2784 0040, Fax: +91 40 2784 0050,
E-mail: info@satragroup.in, Web: www.satragroup.in

PROJECT:
HIMACHAL PRADESH STATE ROADS TRANSFORMATION PROJECT (HPSRTP)

SCALE: AS SHOWN
DATE

JOB No. : 01041055

DESIGNED	GANESH	
DRAWN	SATYA	
CHECKED	PRANAI	
APPROVED	PRANAI	

TITLE : TYPICAL GENERAL ARRANGEMENT DRAWING FOR WIDENING OF SLAB CULVERT (FOR TCS-3B)

REV. 0
SIZE : A3

DRAWING NO : HP/STR/SC/TYP/101

ROAD NAME : Package-IV:
Upgradation of Raghunathpura-Mandi-Harpura-Bharari Road in Bilaspur District from Km 0/000 to Km 2/740.

SHEET 01 OF 02

C:\Users\satyanarayanac\appdata\local\temp\AcPublish_15496\HP-RAG-BHA-STR-SC-TYP-WIDEN-102-TCS-3B.dwg

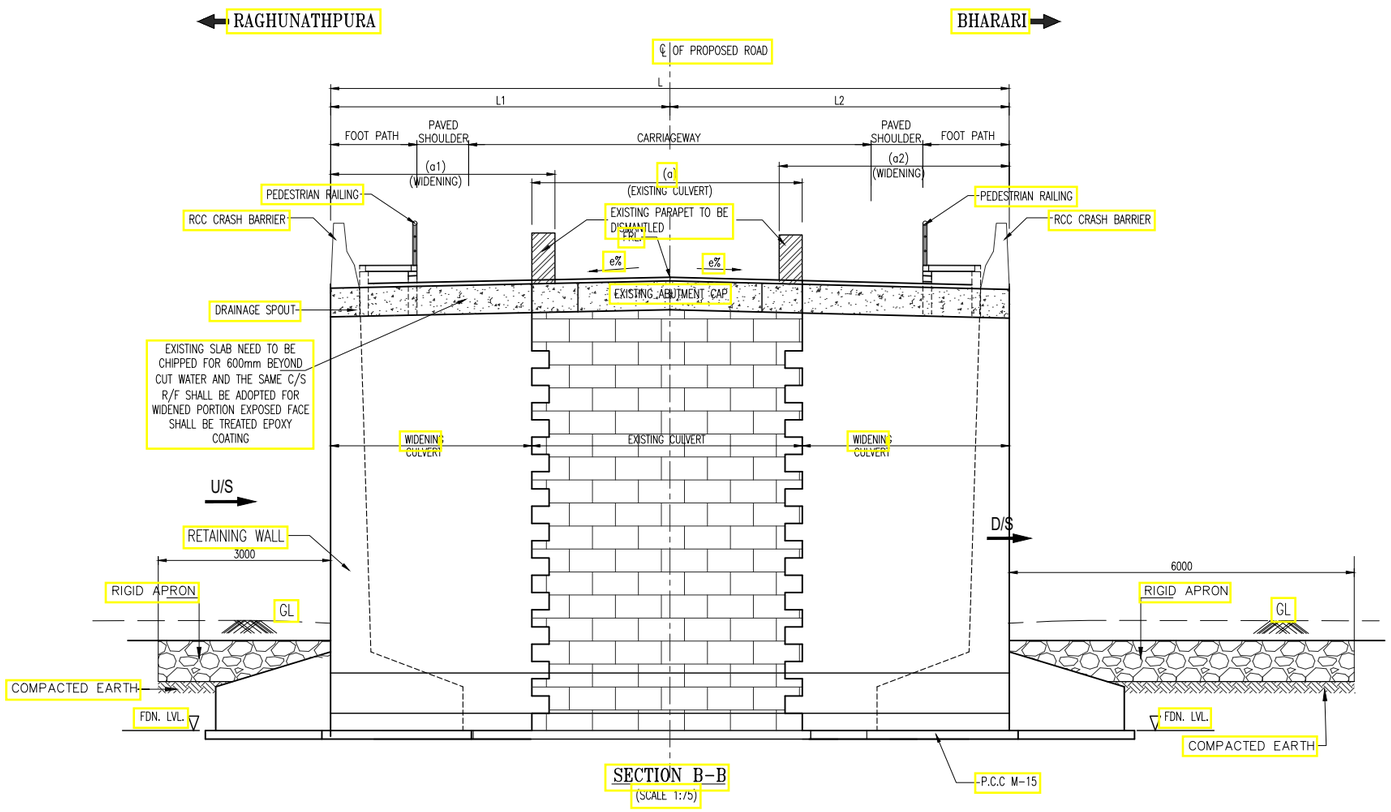

SECTION B-B
(SCALE 1:75)

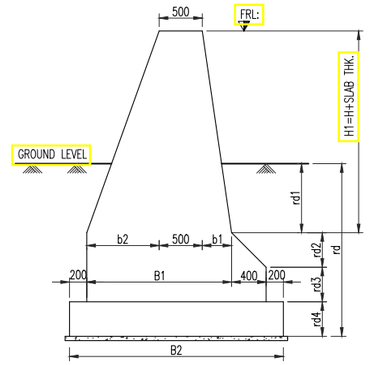

RETURN WALL SECTION
(SCALE 1:100)

LEGEND:

FRL : FINISHED ROAD LEVEL
GL : GROUND LEVEL
THK : THICKNESS
FDN : FOUNDING LEVEL

NOTES:

1. ALL WIDENING OF FOUNDATION, SUBSTRUCTURE AND SUPER STRUCTURE WAS DONE BY KIND AND MONOLITHICALLY. PROPOSED APPROACH SLAB SHALL BE ANCHORED WITH THE EXISTING ONE AS PER SITE CONDITION.
2. R.R.MASONRY/PCC WING WALL DISMANTLED AND REPLACED BY RCC RETAINING WALL. FOR DIMENSION AND REINFORCEMENT VIDE RELEVANT DRAWING. PCC STRAIGHT RETURN DISMANTLED UPTO CAP LEVEL AND REMAINING MAY BE BURIED AS PER SITE CONDITION.
3. KEY STONES FROM RR MASONRY ABUTMENT WALL AND PIER REMOVED TO PROVIDE SHEAR KEY AS SHOWN IN THE SECTIONAL ELEVATION FROM PREPARED INTERFACE OF FOUNDATION AND SUBSTRUCTURE . FOR PCC ABUTMENT AND PIERS RECESSES WERE SCOOPED OUT FROM PREPARED SURFACE OF EXISTING STEMS AND FOUNDATIONS AS SHEAR KEYS FOR MECHANICAL BONDING BETWEEN EXISTING AND PROPOSED STRUCTURE AS SHOWN IN THE SECTIONAL ELEVATION AND CROSS-SECTIONS.
4. APPROVED EPOXY BONDING AGENT E.G. CONCRESIVE 1414 OR OTHER APPLIED AT THE INTERFACE PRIOR TO PLACEMENT OF CONCRETE IN THE WIDENED PART IN ACCORDANCE WITH MANUFACTURER'S SPECIFICATION IN CASE OF CONCRETE TO CONCRETE WIDENING.
5. THE SHAPE OF BURIED COMPONENTS OF ABUTMENT AND PIER FOUNDATIONS SHOWN IN THIS DRAWING ARE ASSUMED. THE DIMENSIONS OF DIFFERENT COMPONENTS IN THE WIDENED PART SHALL BE ADOPTED THE SAME AS THAT OF THE EXISTING STRUCTURE, AFTER THEY ARE EXPOSED BY EXCAVATION.
6. WIDENING OF ABUTMENT MAY BE DONE BY PCC/RCC AS THE CASE MAY BE IN ACCORDANCE WITH APPLICABLE SPECIFICATIONSS. THE GRADES OF CONCRETE SHALL BE AS UNDER :
   a. SUPERSTRUCTURE – M 25 GRADE OF CONCRETE.
   b. SUBSTRUCTURE FOR ABUTMENT AND WINGWALL – M 20 GRADE OF CONCRETE.
   c. LEVELLING COURSE – M15 GRADE OF CONCRETE.
7. FLOOR PROTECTION IF NEEDED WAS PROVIDED AS PER SITE CONDITIONS AND / OR AS DIRECTED BY THE ENGINEER-IN-CHARGE.
8. THE WIDENED BRIDGE IS CAPABLE OF SAFE WITHSTANDING 1 LANE OF IRC CLASS 70 R + 1 LANE OF CLASS A OR 3 LANES OF CLASS A LOADING, WHICHEVER IS SEVERER,
9. APPROACH SLAB WAS CONSTRUCTED FOR THE WIDENED PART OF THE STRUCTURE.
10. ALL UNTENSIONED REINFORCEMENT GRADE DESIGNATION S-500 HAVING YIELD STRENGTH OF 500 Mpa, CONFORMING TO IS:1786 STANDARD.
11. CLEAR COVER TO REINFORCEMENT IS 40 MM.
12. THE BACK FILL BEHIND THE ABUTMENT OF SLAB CULVERT WAS FILLED WITH GRANULAR MATERIAL AS PER CLAUSE 401.4.2.
13. WEEP HOLES 100 DIA, SPACED AT 1000 c/c BOTH HORIZONTALLY AND VERTICALLY WAS PROVIDED IN A STAGGERED MANNER IN ABUTMENT WALL, RETURN WALLS & MEDIAN WALLS FROM FLOOR LEVEL UPTO THE ENTIRE HEIGHT OF ABUTMENTS AND RETAINING WALLS.
14. 600 THK. FILTER MEDIA WAS PROVIDED BEHIND THE ENTIRE LENGTH OF ABUTMENT AND WING WALLS WITH LOWER SIZE AGGREGATES TOWARDS THE FILL IN ACCORDANCE WITH APPLICABLE SPECIFICATION.
15. THIS DRAWING READ IN CONJUNCTION WITH THE RELEVANT DRAWINGS.
16. WIDENING SHALL BE DONE BY KIND AND SHALL BE MADE INTEGRAL WITH THE EXISTING FOUNDATION AND SUBSTRUCTURES BY ANCHORING DOWEL BARS AND SUPERSTRUCTURE SHALL BE MONOLITHIC WITH EXISTING SUPERSTRUCTURE.

S. No.	Existing Chainage (Km)	Design Chainage (km)	Design FRL (m)	Proposed Structure Details				Slab Thickness (t) (m)	Lengths of Box (m)						Abutment Section							Return wall Section					
				Type of Structure	No of Spans	Span (m) (A)	Clear Height (m)		L	L1	L2	a	a1	a2	H	B1	B2	b1	b2	b3	b4	H1	B1	B2	b1	b2	RWL
1	2+050	2+052	526.978	Slab	1	3	1.5	0.30	14.00	6.50	7.50	7.80	2.60	3.60	1.5	1.5	2.7	0.2	0.7	0.3	-	1.8	1.33	2.13	0.24	0.59	2.7

NOTES:
1. ALL DIMENSIONS ARE IN MILLIMETERS UNLESS OTHERWSE SPECIFIED.

REV	DATE	DESCRIPTION	DESIGNED	DRAWN	CHECKED	APPROVED

CLIENT:
HIMACHAL PRADESH ROAD AND OTHER INFRASTRUCTURE DEVELOPMENT CORPORATION LIMITED.

CONSULTANT:
SATRA SERVICES AND SOLUTIONS PVT.LTD.
#1-8-359 to 363, 4th Floor,Centre Point Building,SP Road, Begumpet, Secunderabad,Telangana – 500003, India.
Tel: +91 40 2784 0040, Fax: +91 40 2784 0050,
E-mail: info@satragroup.in, Web: www.satragroup.in

PROJECT:
HIMACHAL PRADESH STATE ROADS TRANSFORMATION PROJECT (HPSRTP)

SCALE: AS SHOWN
DATE

JOB No. : 01041055

DESIGNED	GANESH	
DRAWN	SATYA	
CHECKED	PRANAI	
APPROVED	PRANAI	

TITLE : TYPICAL GENERAL ARRANGEMENT DRAWING FOR WIDENING OF SLAB CULVERT (FOR TCS-3B)

REV. 0
SIZE : A3

DRAWING NO : HP/STR/SC/TYP/102

ROAD NAME : Package-IV:
Upgradation of Raghunathpura-Mandi-Harpura-Bharari Road in Bilaspur District from Km 0/000 to Km 2/740.

SHEET 02 OF 02

C:\Users\satyanarayana\appdata\local\temp\AcPublish_15496\HP-RAG-BHA-STR-SC-TYP-WIDEN-102-TCS-3B.dwg

DRAINAGE DRAWINGS

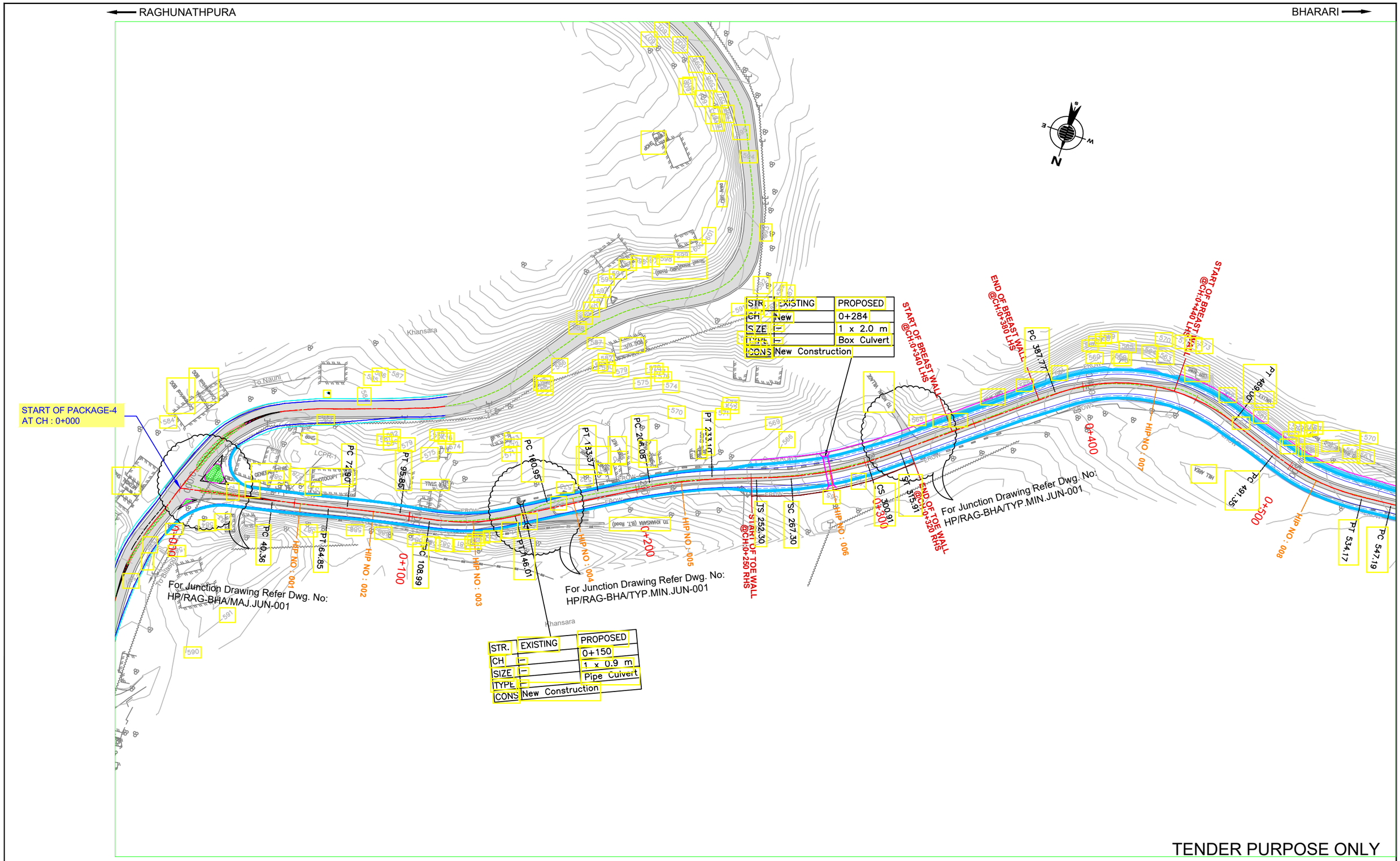

TENDER PURPOSE ONLY

NOTES:
1. ALL DIMENSIONS ARE IN METERS UNLESS OTHERWISE SPECIFIED.

REV	DATE	DESCRIPTION	DESIGNED	DRAWN	CHECKED	APPROVED

CLIENT:
HIMACHAL PRADESH ROAD AND OTHER INFRASTRUCTURE DEVELOPMENT CORPORATION LIMITED.

CONSULTANT:
SATRA
SATRA SERVICES AND SOLUTIONS PVT.LTD.
#1-8-359 to 363, 4th Floor,Centre Point Building,SP Road, Begumpet, Secunderabad,Telangana – 500003, India.
Tel: +91 40 2784 0040, Fax: +91 40 2784 0050,
E-mail: info@satragroup.in, Web: www.satragroup.in

PROJECT:
HIMACHAL PRADESH STATE ROADS TRANSFORMATION PROJECT (HPSRTP)

SCALE: NOT TO SCALE

DESIGNED	SATHISH
DRAWN	SWAROOPA RANI
CHECKED	VS/AH
APPROVED	PRADEEP KAPLA

TITLE : DRAINAGE PLAN & PROFILE
FROM CH:0+000 TO 0+500

DRAWING NO : HP/RAG-BHA/DRAINAGE P&P-

ROAD NAME :
Upgradation of Raghunathpura-Mandi-Harpura-Bharari Road in Bilaspur District from Km 0/000 to Km 2/740.

SHEET 01A OF 06

C:\Users\sivakumarie\appdata\local\temp\AcPublish_7740\01.OSR-11_P & P Layouts.dwg

RAGHUNATHPURA ← → BHARARI

DATUM = +551.000

| | | |

RAGHUNATHPURA ← → BHARARI

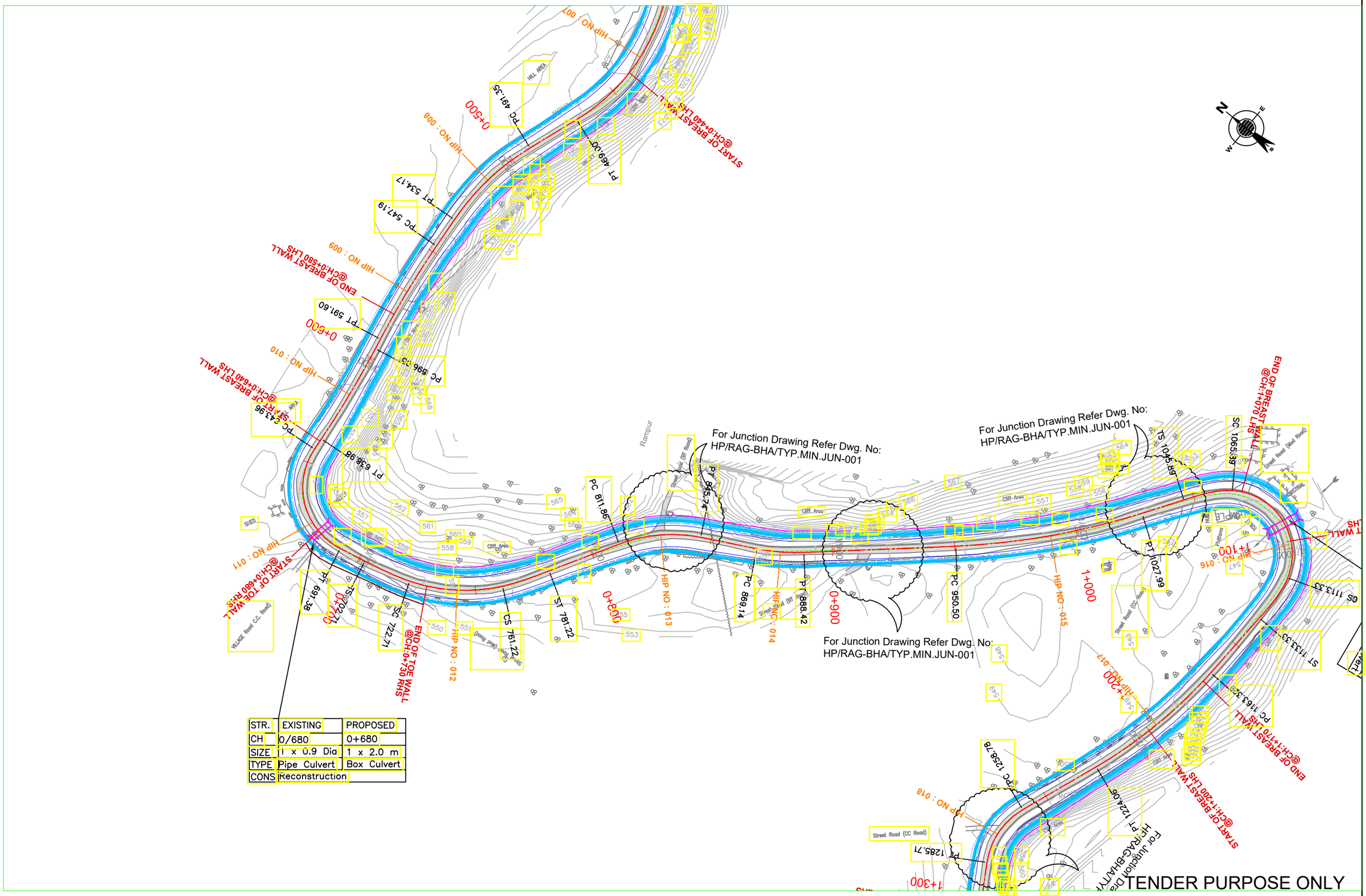

STR.	EXISTING	PROPOSED
CH	0/680	0+680
SIZE	1 x 0.9 Dia	1 x 2.0 m
TYPE	Pipe Culvert	Box Culvert
CONS	Reconstruction	

FOR TENDER PURPOSE ONLY

NOTES:
1. ALL DIMENSIONS ARE IN METERS UNLESS OTHERWISE SPECIFIED.

REV	DATE	DESCRIPTION	DESIGNED	DRAWN	CHECKED	APPROVED

CLIENT:
HIMACHAL PRADESH ROAD AND OTHER INFRASTRUCTURE DEVELOPMENT CORPORATION LIMITED.

CONSULTANT:
SATRA
SATRA SERVICES AND SOLUTIONS PVT.LTD.
#1-8-359 to 363, 4th Floor,Centre Point Building,SP Road, Begumpet, Secunderabad,Telangana – 500003, India.
Tel: +91 40 2784 0040, Fax: +91 40 2784 0050,
E-mail: info@satragroup.in, Web: www.satragroup.in

PROJECT:
HIMACHAL PRADESH STATE ROADS TRANSFORMATION PROJECT (HPSRTP)

SCALE: NOT TO SCALE

DESIGNED	SATHISH
DRAWN	SWAROOPA RANI
CHECKED	VS/AH
APPROVED	PRADEEP KAPLA

TITLE : DRAINAGE PLAN & PROFILE
FROM CH:0+500 TO 1+000

DRAWING NO : HP/RAG-BHA/DRAINAGE P&P-

ROAD NAME :
Upgradation of Raghunathpura-Mandi-Harpura-Bharari Road in Bilaspur District from Km 0/000 to Km 2/740.

SHEET 02A OF 06

C:\Users\sivakumarie\appdata\local\temp\AcPublish_7740\01.OSR-11_P & P Layouts.dwg

← RAGHUNATHPURA

BHARARI →

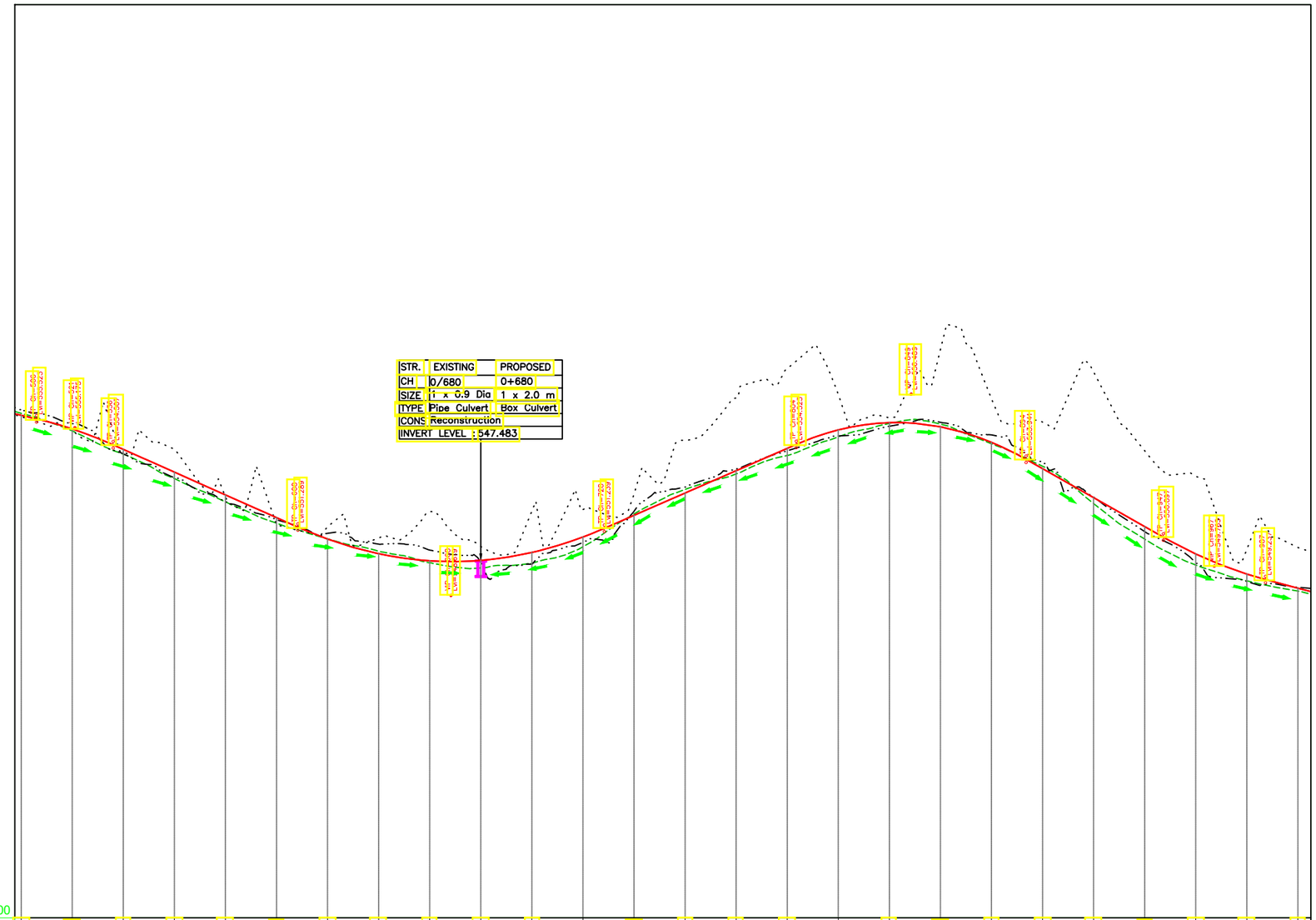

DATUM = +536.000

| | | |

RAGHUNATHPURA ← → BHARARI

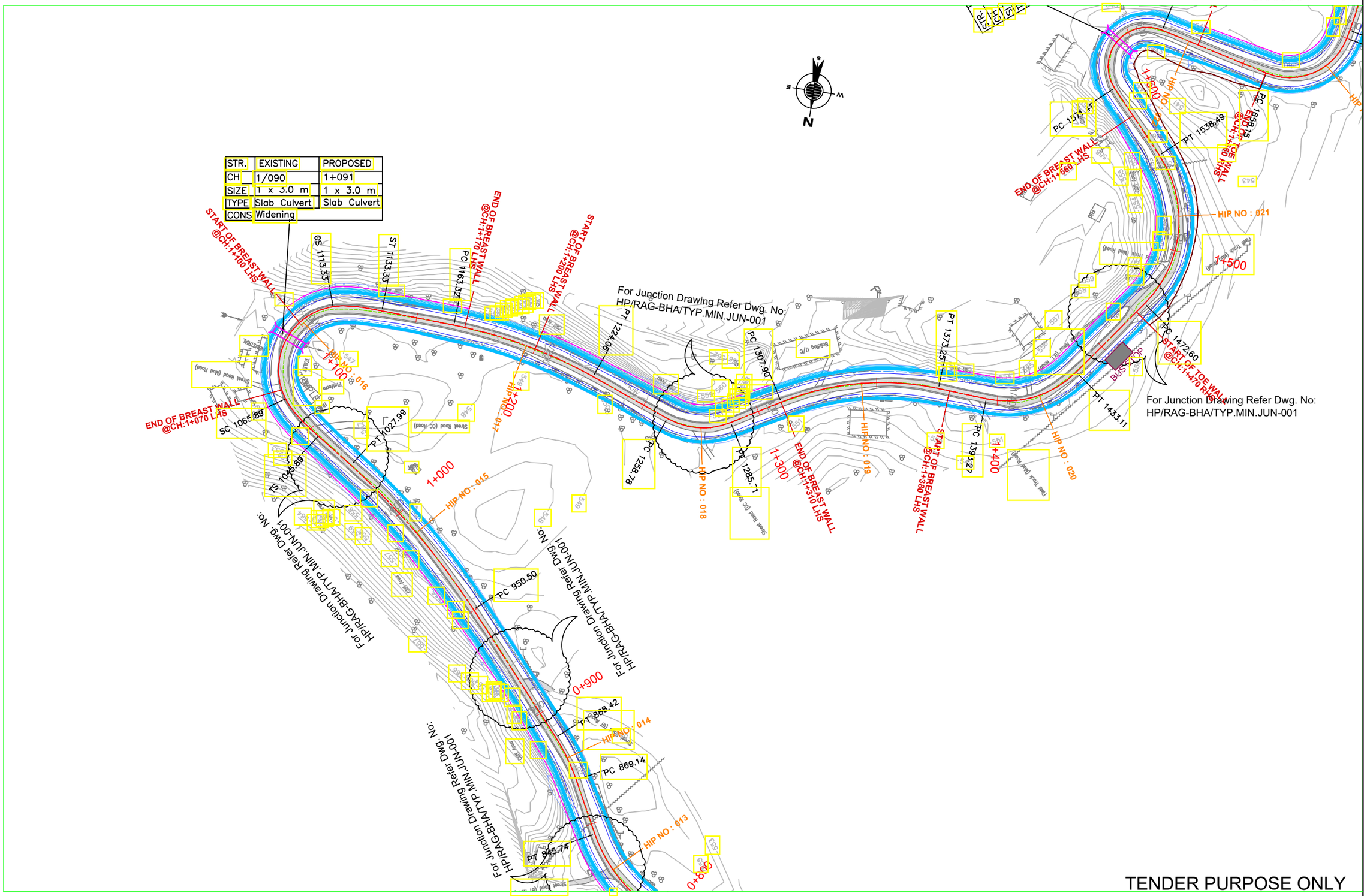

TENDER PURPOSE ONLY

NOTES:
1. ALL DIMENSIONS ARE IN METERS UNLESS OTHERWISE SPECIFIED.

REV	DATE	DESCRIPTION	DESIGNED	DRAWN	CHECKED	APPROVED

CLIENT:
HIMACHAL PRADESH ROAD AND OTHER INFRASTRUCTURE DEVELOPMENT CORPORATION LIMITED.

CONSULTANT:
SATRA
SATRA SERVICES AND SOLUTIONS PVT.LTD.
#1-8-359 to 363, 4th Floor,Centre Point Building,SP Road, Begumpet, Secunderabad,Telangana – 500003, India.
Tel: +91 40 2784 0040, Fax: +91 40 2784 0050,
E-mail: info@satragroup.in, Web: www.satragroup.in

PROJECT:
HIMACHAL PRADESH STATE ROADS TRANSFORMATION PROJECT (HPSRTP)

SCALE: NOT TO SCALE

DESIGNED	SATHISH
DRAWN	SWAROOPA RANI
CHECKED	VS/AH
APPROVED	PRADEEP KAPLA

TITLE : DRAINAGE PLAN & PROFILE
FROM CH:1+000 TO 1+500

DRAWING NO : HP/RAG-BHA/DRAINAGE P&P-

ROAD NAME :
Upgradation of Raghunathpura-Mandi-Harpura-Bharari Road in Bilaspur District from Km 0/000 to Km 2/740.

SHEET 03A OF 06

C:\Users\sivakumarie\appdata\local\temp\AcPublish_7740\01.OSR-11_P & P Layouts.dwg

← RAGHUNATHPURA

BHARARI →

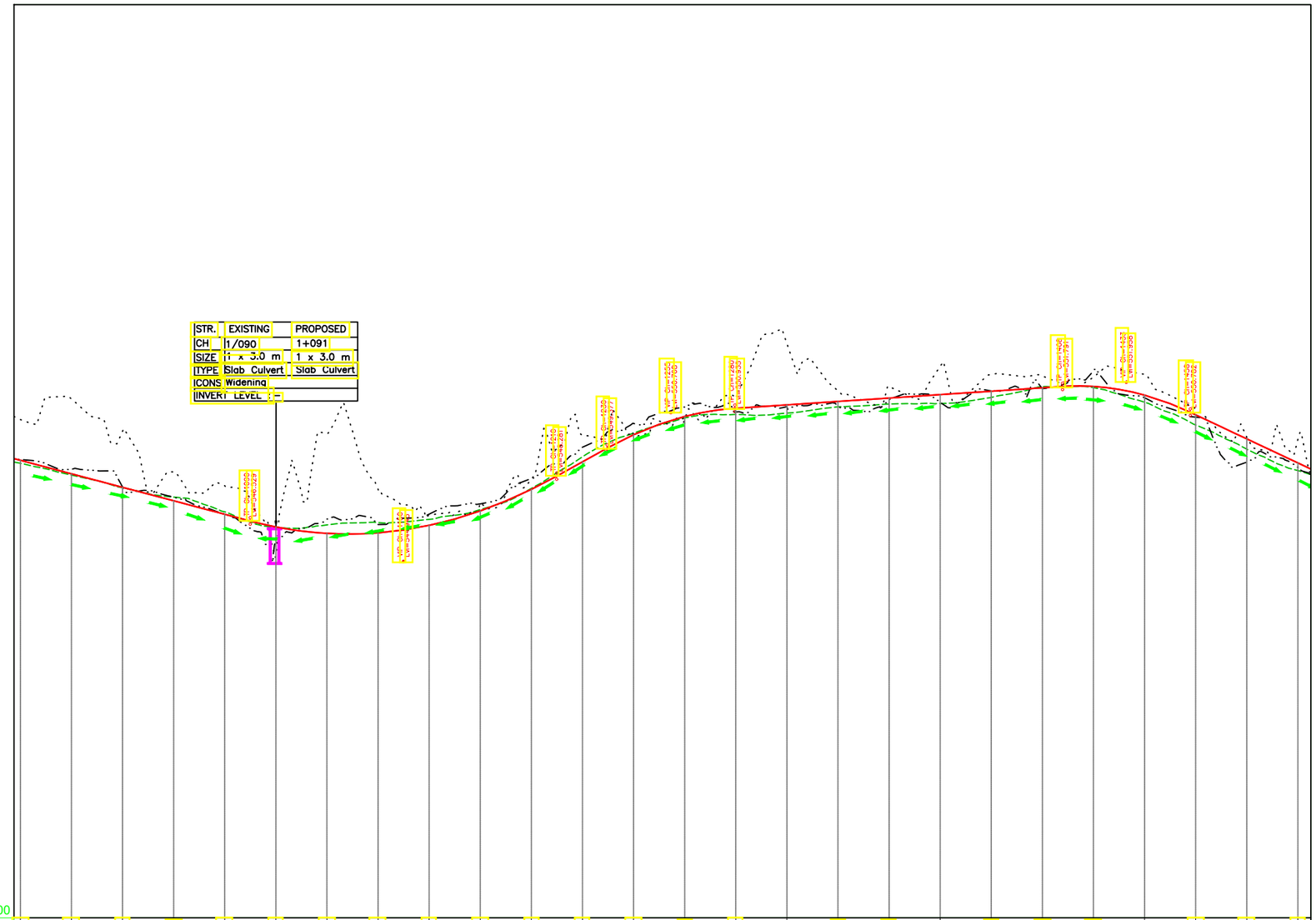

DATUM = +531.000

PROPOSED ROAD LEVELS(m)	EXISTING ROAD LEVELS(m)	GL AT 6.0m LHS (m)	GL AT 6.0m RHS (m)
548.902	548.788	550.493	548.933
548.374	548.325	551.298	548.556
547.846	547.829	550.035	547.862
547.318	547.465	548.452	547.457
546.790	546.888	547.909	546.791
546.297	546.281	545.191	545.647
546.044	546.376	549.943	546.603
546.064	546.466	547.764	546.387
546.357	546.593	546.750	546.797
546.924	546.973	547.233	547.198
547.764	547.804	548.169	548.183
548.843	549.039	549.881	549.415
549.902	549.966	549.920	550.341
550.615	550.563	550.524	550.988
550.937	550.697	551.473	550.794
551.071	550.748	553.474	550.993
551.204	550.992	551.625	551.029
551.338	551.103	551.786	551.282
551.471	551.124	552.578	551.169
551.605	551.364	552.259	551.618
551.738	551.785	552.199	551.705
551.793	551.748	552.149	552.395
551.451	551.175	552.267	551.348
550.682	550.285	550.909	550.591
549.740	549.338	549.802	548.822
548.799	548.502	549.720	548.598

VERTICAL SCHEMATIC

HORIZONTAL SCHEMATIC: 7.487 | D | CL=20.000 | R=26.000 L=47.446 | CL=20.000 | D=29.984 | R=190.000 L=60.748 | D=34.717 | R=-30.000 L=26.924 | D=22.198 | R=110.000 L=65.347 | D=20.021 | R=-40.000 L=39.841 | D=39.491 | R=-48.00

SUPERELEVATION: e=5.00% | e=3.743% | e=5.00% | e=6.465% | e=5.00%

CROSS SECTION DETAILS: TCS-2B | TCS-2A | TCS-2B | TCS-2A | TCS-2B | TCS-2A

PROPOSED CHAINAGE: 1+000 | 1+020 | 1+040 | 1+060 | 1+080 | 1+100 | 1+120 | 1+140 | 1+160 | 1+180 | 1+200 | 1+220 | 1+240 | 1+260 | 1+280 | 1+300 | 1+320 | 1+340 | 1+360 | 1+380 | 1+400 | 1+420 | 1+440 | 1+460 | 1+480 | 1+500

TENDER PURPOSE ONLY

NOTES:
1. ALL DIMENSIONS ARE IN METERS UNLESS OTHERWISE SPECIFIED.

REV	DATE	DESCRIPTION	DESIGNED	DRAWN	CHECKED	APPROVED

CLIENT:
HIMACHAL PRADESH ROAD AND OTHER INFRASTRUCTURE DEVELOPMENT CORPORATION LIMITED.

CONSULTANT:
SATRA
SATRA SERVICES AND SOLUTIONS PVT.LTD.
#1-8-359 to 363, 4th Floor,Centre Point Building,SP Road, Begumpet, Secunderabad,Telangana – 500003, India.
Tel: +91 40 2784 0040, Fax: +91 40 2784 0050,
E-mail: info@satragroup.in, Web: www.satragroup.in

PROJECT:
HIMACHAL PRADESH STATE ROADS TRANSFORMATION PROJECT (HPSRTP)

SCALE: NOT TO SCALE

DESIGNED	SATHISH
DRAWN	SWAROOPA RANI
CHECKED	VS/AH
APPROVED	PRADEEP KAPLA

TITLE : DRAINAGE PLAN & PROFILE
FROM CH:1+000 TO 1+500

DRAWING NO : HP/RAG-BHA/DRAINAGE P&P-

ROAD NAME :
Upgradation of Raghunathpura-Mandi-Harpura-Bharari Road in Bilaspur District from Km 0/000 to Km 2/740.

SHEET 03B OF 06

C:\Users\sivakumarle\appdata\local\temp\AcPublish_7740\01.OSR-11_P & P Layouts.dwg

RAGHUNATHPURA ⟵ ⟶ BHARARI

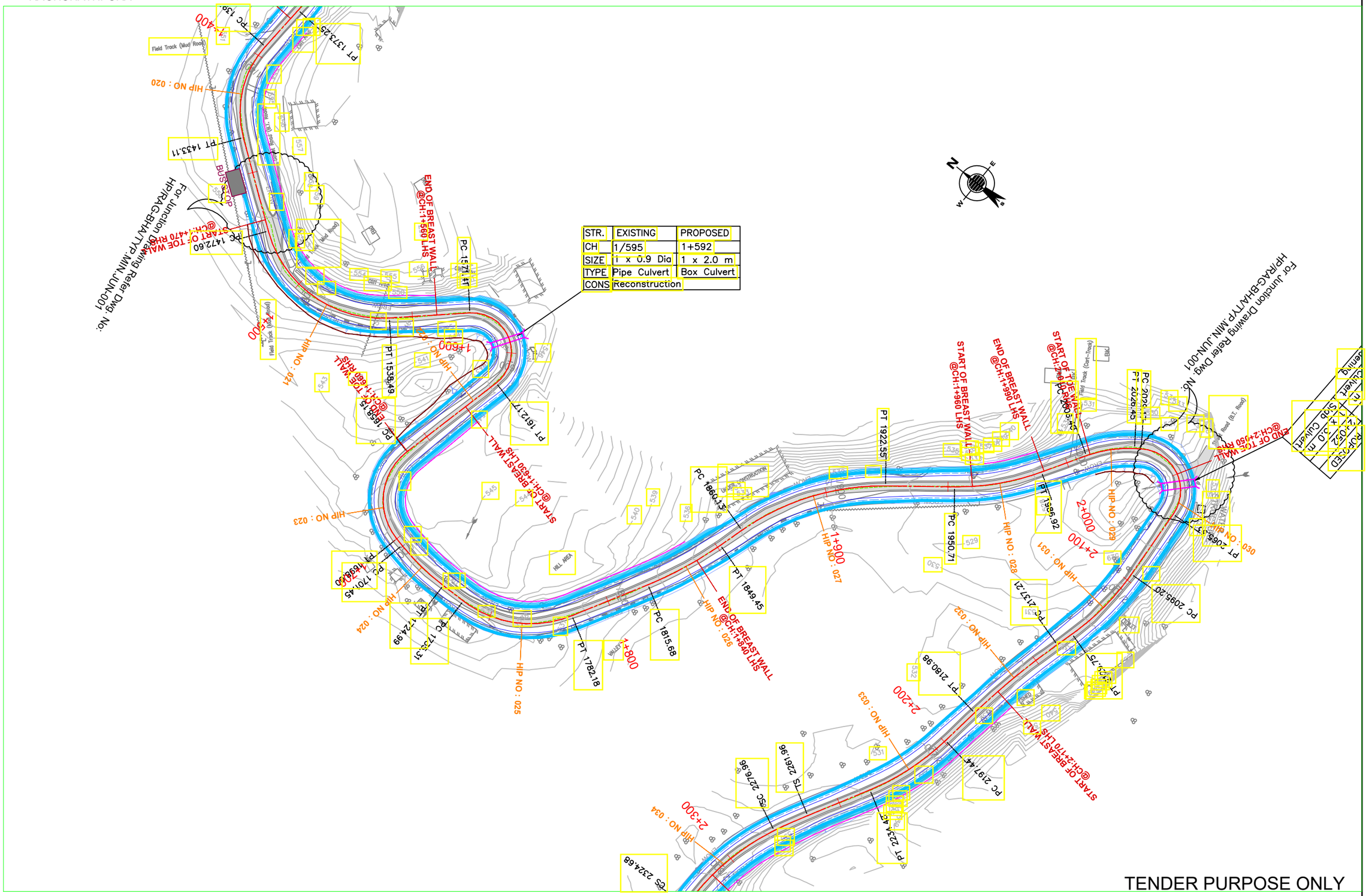

NOTES:
1. ALL DIMENSIONS ARE IN METERS UNLESS OTHERWISE SPECIFIED.

REV	DATE	DESCRIPTION	DESIGNED	DRAWN	CHECKED	APPROVED

CLIENT:
HIMACHAL PRADESH ROAD AND OTHER INFRASTRUCTURE DEVELOPMENT CORPORATION LIMITED.

CONSULTANT:
SATRA
SATRA SERVICES AND SOLUTIONS PVT.LTD.
#1-8-359 to 363, 4th Floor,Centre Point Building,SP Road, Begumpet, Secunderabad,Telangana – 500003, India.
Tel: +91 40 2784 0040, Fax: +91 40 2784 0050,
E-mail: info@satragroup.in, Web: www.satragroup.in

PROJECT:
HIMACHAL PRADESH STATE ROADS TRANSFORMATION PROJECT (HPSRTP)

SCALE: NOT TO SCALE

DESIGNED	SATHISH
DRAWN	SWAROOPA RANI
CHECKED	VS/AH
APPROVED	PRADEEP KAPLA

TITLE : DRAINAGE PLAN & PROFILE
FROM CH: 1+500 TO 2+000

DRAWING NO : HP/RAG-BHA/DRAINAGE P&P-

ROAD NAME :
Upgradation of Raghunathpura-Mandi-Harpura-Bharari Road in Bilaspur District from Km 0/000 to Km 2/740.

SHEET 04A OF 06

C:\Users\sivakumarie\appdata\local\temp\AcPublish_7740\01.OSR-11_P & P Layouts.dwg

← RAGHUNATHPURA

BHARARI →

STR.	EXISTING	PROPOSED
CH	1/595	1+592
SIZE	1 x 0.9 Dia	1 x 2.0 m
TYPE	Pipe Culvert	Box Culvert
CONS	Reconstruction	
INVERT LEVEL	542.900	

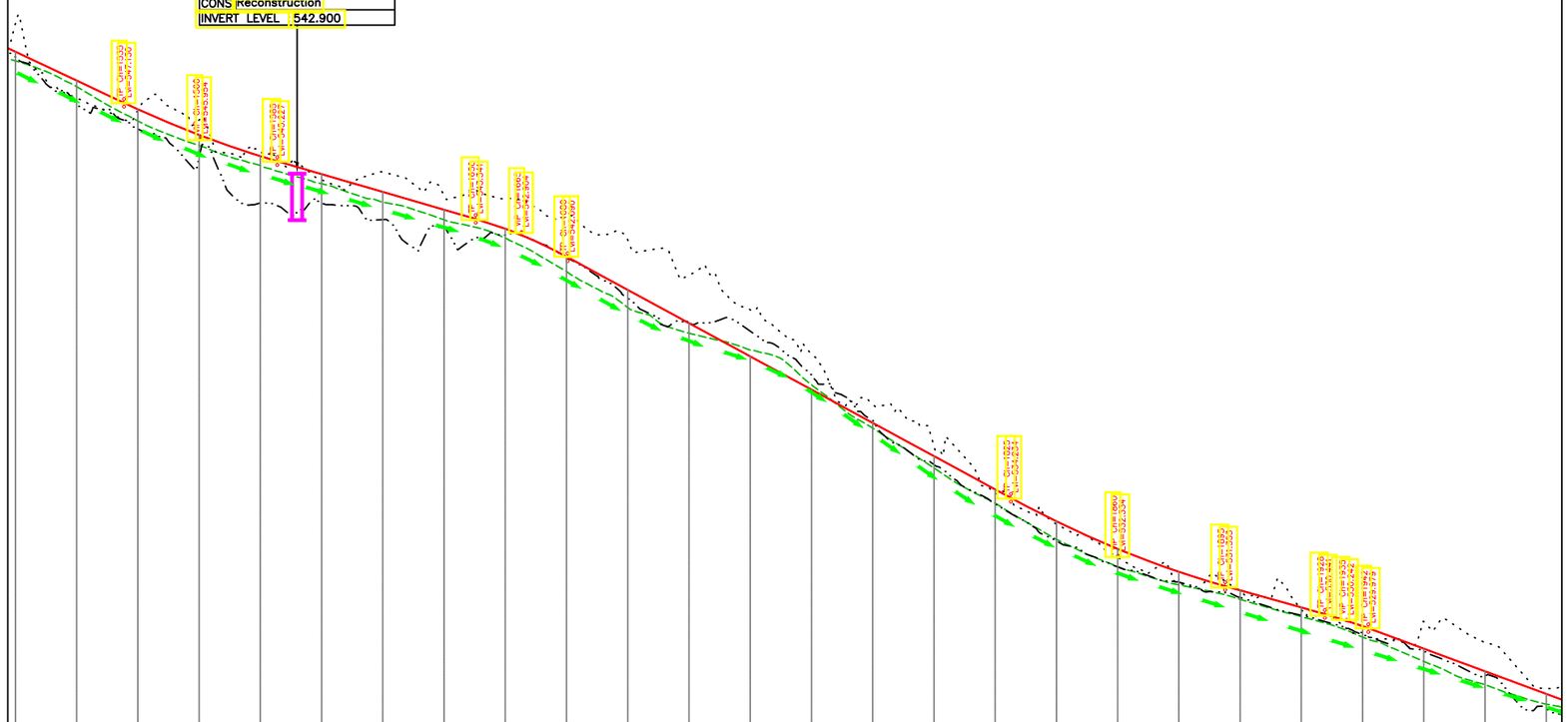

DATUM = +521.000

| | | |

RAGHUNATHPURA ← → BHARARI

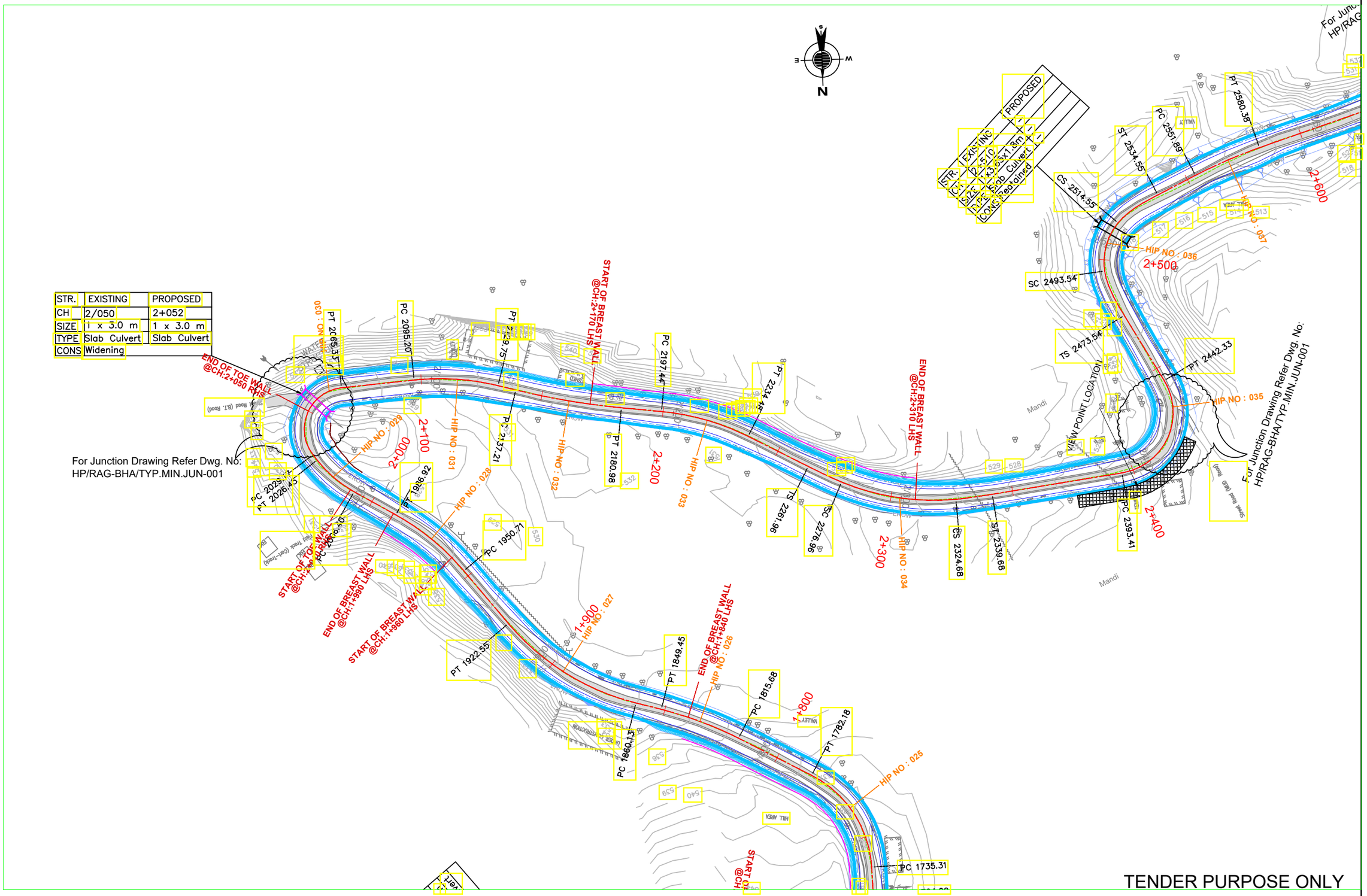

TENDER PURPOSE ONLY

NOTES:
1. ALL DIMENSIONS ARE IN METERS UNLESS OTHERWISE SPECIFIED.

REV	DATE	DESCRIPTION	DESIGNED	DRAWN	CHECKED	APPROVED

CLIENT:
HIMACHAL PRADESH ROAD AND OTHER INFRASTRUCTURE DEVELOPMENT CORPORATION LIMITED.

CONSULTANT:
SATRA
SATRA SERVICES AND SOLUTIONS PVT.LTD.
#1-8-359 to 363, 4th Floor,Centre Point Building,SP Road, Begumpet, Secunderabad,Telangana – 500003, India.
Tel: +91 40 2784 0040, Fax: +91 40 2784 0050,
E-mail: info@satragroup.in, Web: www.satragroup.in

PROJECT:
HIMACHAL PRADESH STATE ROADS TRANSFORMATION PROJECT (HPSRTP)

SCALE: NOT TO SCALE

DESIGNED	SATHISH
DRAWN	SWAROOPA RANI
CHECKED	VS/AH
APPROVED	PRADEEP KAPLA

TITLE : DRAINAGE PLAN & PROFILE
FROM CH: 2+000 TO 2+500

DRAWING NO : HP/RAG-BHA/DRAINAGE P&P-

ROAD NAME :
Upgradation of Raghunathpura-Mandi-Harpura-Bharari Road in Bilaspur District from Km 0/000 to Km 2/740.

SHEET 05A OF 06

C:\Users\sivakumarie\appdata\local\temp\AcPublish_7740\01.OSR-11_P & P Layouts.dwg

← RAGHUNATHPURA

BHARARI →

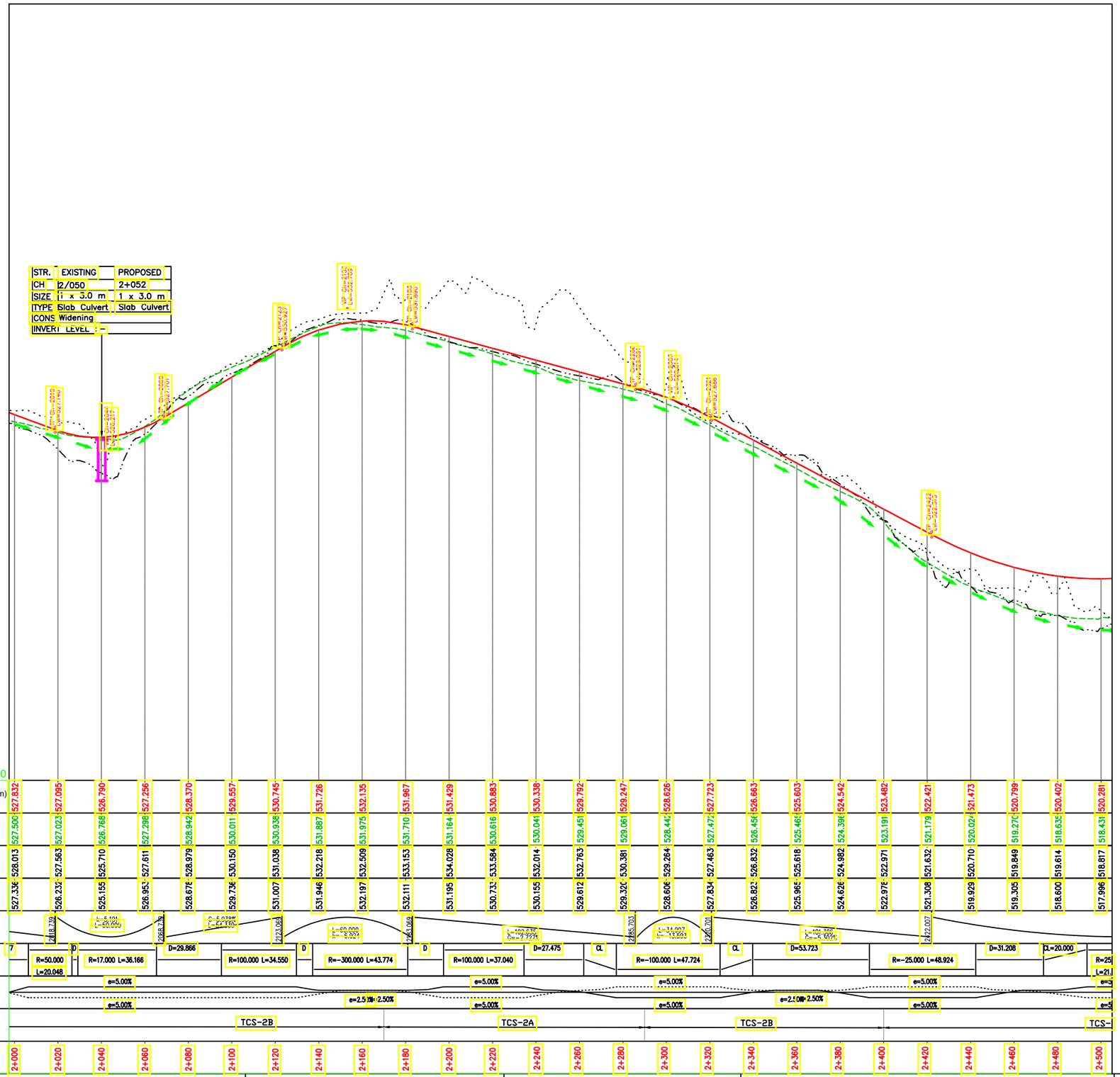

TENDER PURPOSE ONLY

NOTES:
1. ALL DIMENSIONS ARE IN METERS UNLESS OTHERWISE SPECIFIED.

REV	DATE	DESCRIPTION	DESIGNED	DRAWN	CHECKED	APPROVED

CLIENT:

HIMACHAL PRADESH ROAD AND OTHER INFRASTRUCTURE DEVELOPMENT CORPORATION LIMITED.

CONSULTANT:

SATRA

SATRA SERVICES AND SOLUTIONS PVT.LTD.

#1-8-359 to 363, 4th Floor,Centre Point Building,SP Road, Begumpet, Secunderabad,Telangana – 500003, India.
Tel: +91 40 2784 0040, Fax: +91 40 2784 0050,
E-mail: info@satragroup.in, Web: www.satragroup.in

PROJECT:

HIMACHAL PRADESH STATE ROADS TRANSFORMATION PROJECT (HPSRTP)

SCALE: NOT TO SCALE

DESIGNED	SATHISH
DRAWN	SWAROOPA RANI
CHECKED	VS/AH
APPROVED	PRADEEP KAPLA

TITLE : DRAINAGE PLAN & PROFILE
FROM CH: 2+000 TO 2+500

DRAWING NO : HP/RAG-BHA/DRAINAGE P&P-

ROAD NAME :
Upgradation of Raghunathpura-Mandi-Harpura-Bharari Road in Bilaspur District from Km 0/000 to Km 2/740.

SHEET 05B OF 06

C:\Users\sivakumarie\appdata\local\temp\AcPublish_7740\01.OSR-11_P & P Layouts.dwg

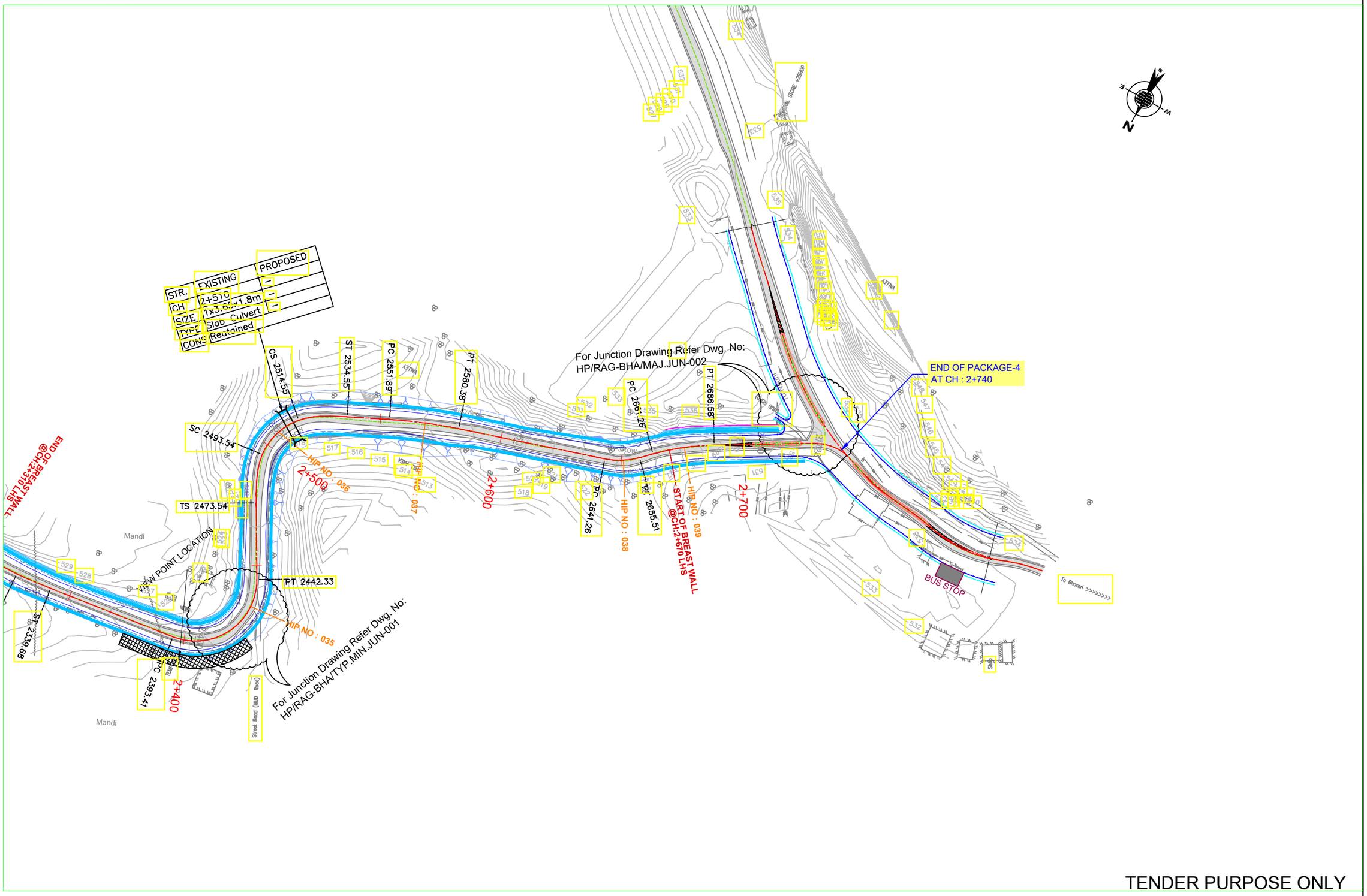

TENDER PURPOSE ONLY

NOTES:
1. ALL DIMENSIONS ARE IN METERS UNLESS OTHERWISE SPECIFIED.

REV	DATE	DESCRIPTION	DESIGNED	DRAWN	CHECKED	APPROVED

CLIENT:
HIMACHAL PRADESH ROAD AND OTHER INFRASTRUCTURE DEVELOPMENT CORPORATION LIMITED.

CONSULTANT:
SATRA
SATRA SERVICES AND SOLUTIONS PVT.LTD.
#1-8-359 to 363, 4th Floor,Centre Point Building,SP Road, Begumpet, Secunderabad,Telangana – 500003, India.
Tel: +91 40 2784 0040, Fax: +91 40 2784 0050,
E-mail: info@satragroup.in, Web: www.satragroup.in

PROJECT:
HIMACHAL PRADESH STATE ROADS TRANSFORMATION PROJECT (HPSRTP)

SCALE: NOT TO SCALE

DESIGNED	SATHISH
DRAWN	SWAROOPA RANI
CHECKED	VS/AH
APPROVED	PRADEEP KAPLA

TITLE : DRAINAGE PLAN & PROFILE
FROM CH: 2+500 TO 2+740

DRAWING NO : HP/RAG-BHA/DRAINAGE P&P-

ROAD NAME :
Upgradation of Raghunathpura-Mandi-Harpura-Bharari Road in Bilaspur District from Km 0/000 to Km 2/740.

SHEET 06A OF 06

C:\Users\sivakumarie\appdata\local\temp\AcPublish_7740\01.OSR-11_P & P Layouts.dwg

← RAGHUNATHPURA

BHARARI →

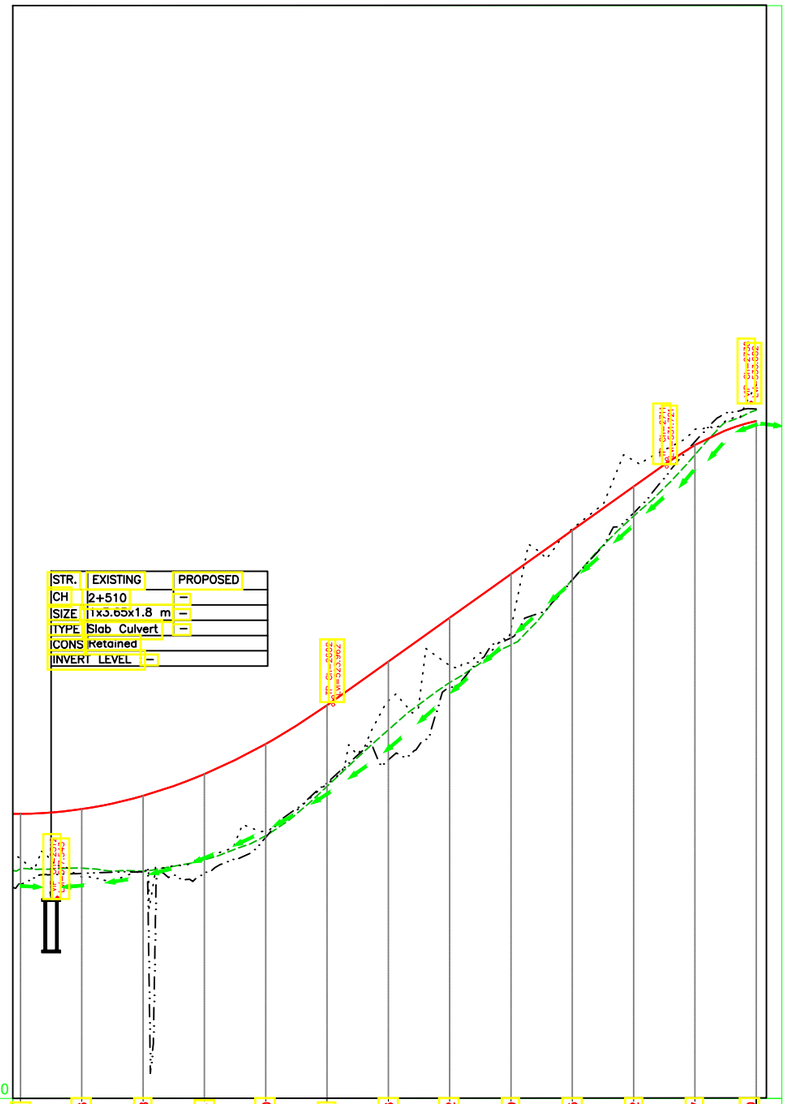

STR.	EXISTING	PROPOSED
CH	2+510	–
SIZE	11x3.65x1.8 m	–
TYPE	Slab Culvert	–
CONS	Retained	
INVERT LEVEL	–	

DATUM = +511.000

PROPOSED ROAD LEVELS(m)	520.281	520.436	520.868	521.576	522.560	523.821	525.246	526.672	528.099	529.525	530.952	532.307	533.090
EXISTING ROAD LEVELS(m)	518.431	518.514	518.422	518.726	519.446	520.960	522.816	524.405	525.676	527.655	529.775	531.726	533.351
GL AT 6.0m LHS (m)	518.817	518.219	518.414	518.861	519.726	521.256	523.968	525.116	526.317	529.577	531.801	532.816	534.269
GL AT 6.0m RHS (m)	517.996	518.339	518.385	518.361	519.512	521.291	522.042	524.396	526.017	527.905	530.083	532.414	533.480

VERTICAL SCHEMATIC: L=14.476, L=100.000; 2692.001; C=7.1325, L=106.776; 2710.783; T=66.000, L=6.999

HORIZONTAL SCHEMATIC: R=25.000, L=21.016; Q=20.000; D; R=200.000 L=28.488; D=60.883; R=-30.000; D; L=14.251; R=100.000, L=25.377; D=40.693; R=20.000, L=12.723

SUPERELEVATION: e=3.00%; e=5.00%; e=3.556%; e=3.556%; e=5.00%; e=5.00%; e=5.00%; e=5.00%; e=2.50%

CROSS SECTION DETAILS: CS-3; TCS-2A

PROPOSED CHAINAGE: 2+500, 2+520, 2+540, 2+560, 2+580, 2+600, 2+620, 2+640, 2+660, 2+680, 2+700, 2+720, 2+740

TENDER PURPOSE ONLY

NOTES:
1. ALL DIMENSIONS ARE IN METERS UNLESS OTHERWISE SPECIFIED.

REV	DATE	DESCRIPTION	DESIGNED	DRAWN	CHECKED	APPROVED

CLIENT:
HIMACHAL PRADESH ROAD AND OTHER INFRASTRUCTURE DEVELOPMENT CORPORATION LIMITED.

CONSULTANT:
SATRA
SATRA SERVICES AND SOLUTIONS PVT.LTD.
#1-8-359 to 363, 4th Floor,Centre Point Building,SP Road, Begumpet, Secunderabad,Telangana – 500003, India.
Tel: +91 40 2784 0040, Fax: +91 40 2784 0050,
E-mail: info@satragroup.in, Web: www.satragroup.in

PROJECT:
HIMACHAL PRADESH STATE ROADS TRANSFORMATION PROJECT (HPSRTP)

SCALE: NOT TO SCALE

DESIGNED	SATHISH
DRAWN	SWAROOPA RANI
CHECKED	VS/AH
APPROVED	PRADEEP KAPLA

TITLE : DRAINAGE PLAN & PROFILE
FROM CH: 2+500 TO 2+740

DRAWING NO : HP/RAG-BHA/DRAINAGE P&P-

ROAD NAME :
Upgradation of Raghunathpura-Mandi-Harpura-Bharari Road in Bilaspur District from Km 0/000 to Km 2/740.

SHEET 06B OF 06

C:\Users\sivakumarie\appdata\local\temp\AcPublish_7740\01.OSR-11_P & P Layouts.dwg

MISCELLANEOUS

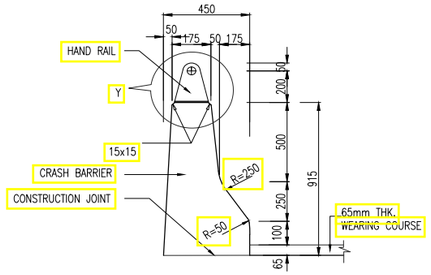

DETAIL OF CRASH BARRIER WITH HAND RAIL

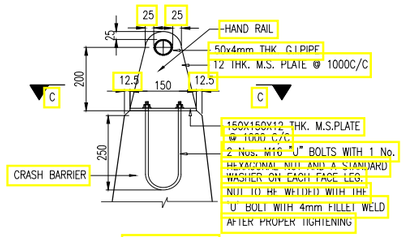

DETAIL 'Y'

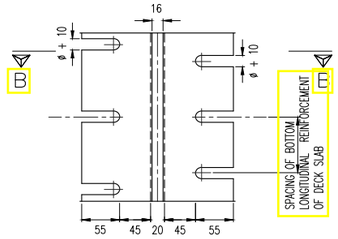

DETAIL OF COPPER STRIP
(SCALE:- 1:100)

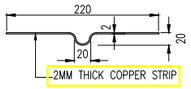

SECTION B-B

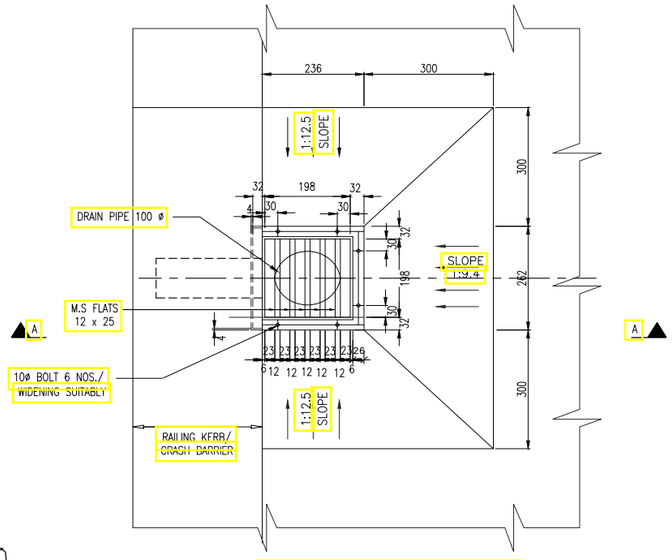

DETAILS OF DRAINAGE SPOUT AND COLLECTION PIT

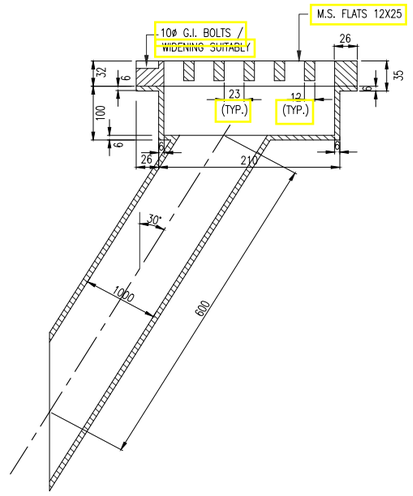

SECTION A-A

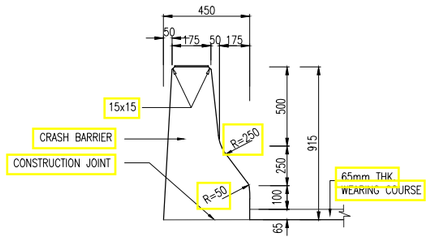

DETAIL OF CRASH BARRIER WITHOUT HAND RAIL

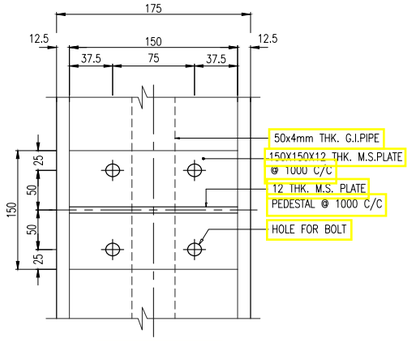

SECTION C-C

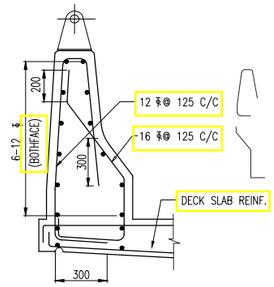

REINF. DETAIL OF CRASH BARRIER WITH HAND RAIL

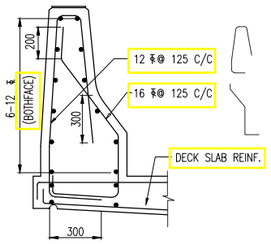

REINF. DETAIL OF CRASH BARRIER WITHOUT HAND RAIL

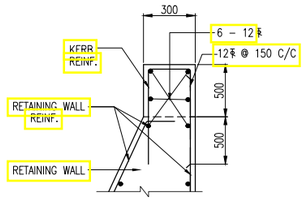

REINF. DETAIL OF KERB WITH RETAINING WALL

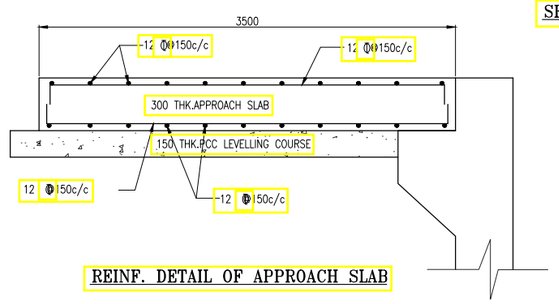

REINF. DETAIL OF APPROACH SLAB

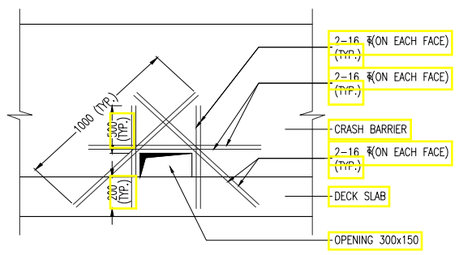

REINF. DETAILS
AROUND OPENING IN CRASH BARRIER
(ADJACENT TO FOOTWAY)

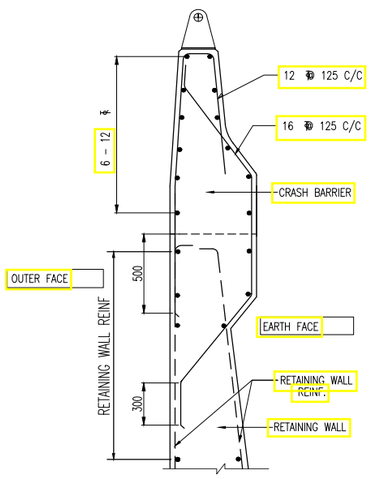

REINF. DETAIL OF CRASH BARRIER WIHT HAND RAIL & RETAINING WALL

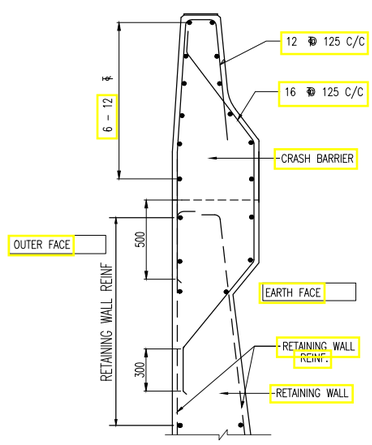

REINF. DETAIL OF CRASH BARRIER WITHOUT HAND RAIL WITH RETAINING WALL

NOTES:-

1. ALL DIMENSIONS ARE IN MILLIMETERS.
2. READ THIS DRAWING IN CONJUNCTION WITH ALL OTHER RELEVANT DRAWINGS.
3. SPACING OF DRAINAGE SPOUT IN DIFFERENT SPANS WILL BE AS SHOWN IN THE GENERAL ARRANGEMENT DRAWINGS OF THE CORRESPONDING SPANS.
4. DRAINAGE SPOUT AND COLLECTION PIT ASSEMBLY SHALL BE FABRICATED FROM MILD STEEL AND AFTER FABRICATION THE COMPLETE ASSEMBLY EXCEPT GRATING SHALL BE GIVEN A HOT DIPPED GALVANISED COATING.
5. THE ENDS OF RAILING PIPES SHALL BE SEALED WITH A CIRCULAR PIECE OF MS PLATE WELDED TO END OF PIPE.
6. GRADE OF CONCRETE FOR VARIOUS ELEMENTS SHALL BE AS FOLLOWS:
   a) CRASH BARRIER – M40
   b) APPROACH SLAB – M30
7. 20mm EXPANSION GAP SHALL BE PROVIDED IN THE CRASH BARRIER AT EXPANSION JOINT LOCATIONS.
8. COMPRESSION SEAL EXPANSION JOINT SHALL BE PROVIDE UPTO 20mm EXP. GAP AND STRIP SEAL EXPANSION JOINT SHALL BE PROVIDED FOR EXPANSION GAP MORETHAN 20mm.
9. THE SPACING OF DRAINAGE SPOUT SHALL BE LESS THAN 5.0m C/C.
10. THE FIXING CLAMPS WILL BE OF HOT DIPPED GALVANISED MS FLAT.
11. MINIMUM NUMBER OF CLAMPS TO BE PROVIDED WITH VERTICAL DRAINAGE SPOUT FOR FIXING TO LONGITUDINAL GIRDERS SHALL BE TWO.

NOTES:
1. ALL DIMENSIONS ARE IN MILLIMETERS UNLESS OTHERWISE SPECIFIED.

REV	DATE	DESCRIPTION	DESIGNED	DRAWN	CHECKED	APPROVED

CLIENT:
HIMACHAL PRADESH ROAD AND OTHER INFRASTRUCTURE DEVELOPMENT CORPORATION LIMITED.

CONSULTANT:
SATRA SERVICES AND SOLUTIONS PVT.LTD.
#1-8-359 to 363, 4th Floor,Centre Point Building,SP Road, Begumpet, Secunderabad,Telangana – 500003, India.
Tel: +91 40 2784 0040, Fax: +91 40 2784 0050,
E-mail: info@satragroup.in, Web: www.satragroup.in

PROJECT:
HIMACHAL PRADESH STATE ROADS TRANSFORMATION PROJECT (HPSRTP)

SCALE: AS SHOWN
DATE

JOB No. : 01041055
DESIGNED
DRAWN
CHECKED
APPROVED

TITLE : TYPICAL DETAILS OF CRASS BARRIER, DRAINAGE SPOUT & APROACH SLAB

REV. 0
SIZE : A3

DRAWING NO : HP/STR/MISC/601

ROAD NAME : Package-IV: Upgradation of Raghunathpura-Mandi-Harpura-Bharari Road in Bilaspur District from Km 0/000 to Km 2/740.

SHEET 01 OF 01

C:\Users\satyanarayanac\appdata\local\temp\AcPublish_12036\1.HP-RAG-BHA-STR-MISC-601.dwg

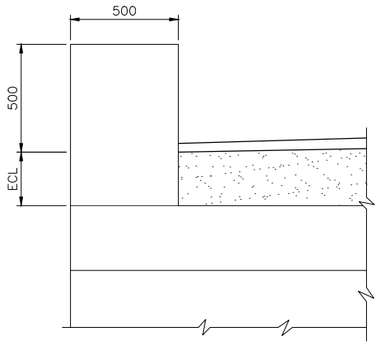

FOR LHS PARAPET

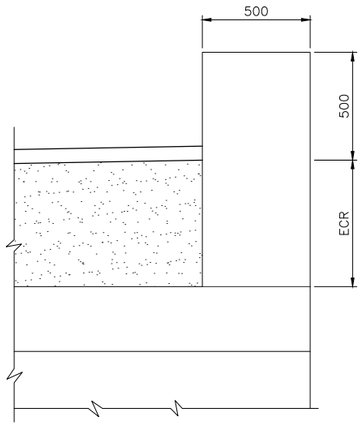

FOR RHS PARAPET

DIMENSIONAL DETAILS OF PARAPET

(SCALE 1:20)

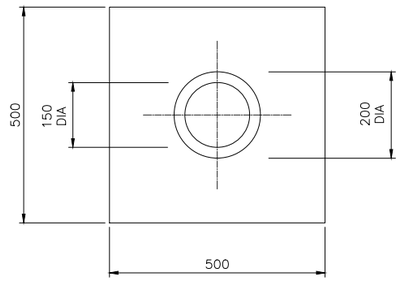

SECTION AT A-A

(SCALE 1:10)

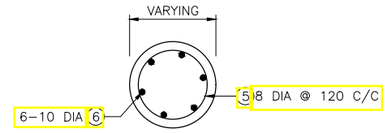

SECTION AT B-B

(SCALE 1:10)

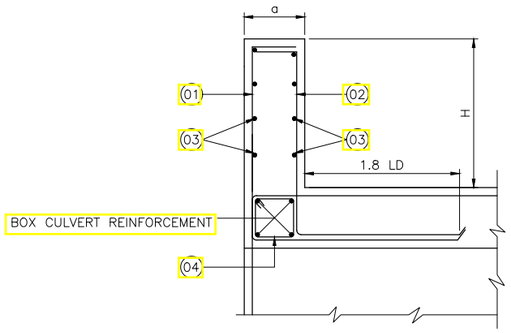

JUNCTION DETAIL OF PARAPET & TOP SLAB

(SCALE 1:20)

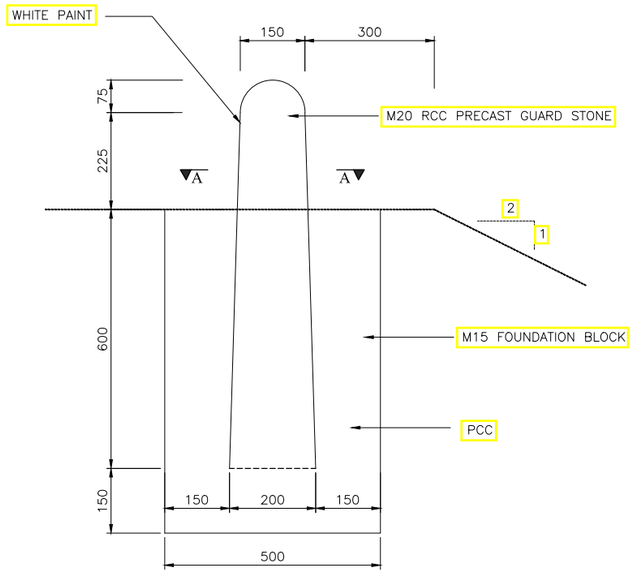

DETAIL OF PRECAST GUARD STONE @ 1.0m C/C

(SCALE 1:10)

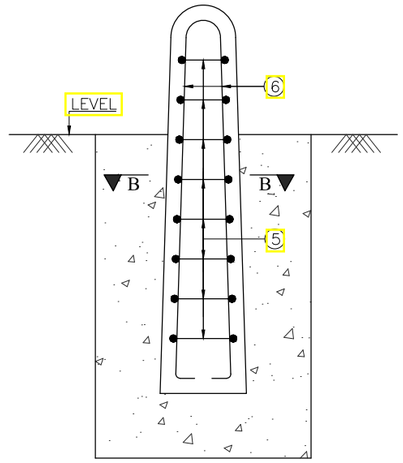

REINFORCEMENT DETAIL OF GUARD STONE

(SCALE 1:10)

NOTES:

1. ALL DIMENSIONS ARE IN MILLIMETRES AND LEVELS ARE IN METERS UNLESS NOTED OTHERWISE.
2. CONCRETE GRADE
   a). PCC M20
   b). PARAPET WALL M30
   c). GUARD STONE M20
3. GRADE OF UNTENSIONED STEEL SHALL BE S – 500 CONFORMING TO IS:1786.
4. NOT MORE THAN 50% OF THE BARS BE LAPPED AT ONE SECTION
5. DEVELOPMENT LENGTH LD 56 TIMES DIA OF BAR
6. LAP LENGTH 1.8 LD
8. CLEAR COVER :-
   PARAPET WALL-40mm.

REINFORCEMENT SCHEDULE

BAR MARK	HEIGHT OF PARAPET(H) / SHAPE OF BARS (NOT TO SCALE)	0.5m BAR DIA. in mm.	0.5m SPACING in mm.	1.0m BAR DIA. in mm.	1.0m SPACING in mm.	1.5m BAR DIA. in mm.	1.5m SPACING in mm.	2.0m BAR DIA. in mm.	2.0m SPACING in mm.	2.5m BAR DIA. in mm.	2.5m SPACING in mm.
01		10	180	10	180	10	250	10	200	10	200
02		10	180	10	180	10	120	12	150	12	100
03		10	250	10	250	10	250	10	250	10	250
04		NOT IN USE		NOT IN USE		NOT IN USE		10	200	10	200

DIMENSION OF PARAPET WALL

	HEIGHT 0.5m	1.0m	1.5m	2.0m	2.5m
a	300	300	300	300	300

NOTES:
1. ALL DIMENSIONS ARE IN MILLIMETERS UNLESS OTHERWISE SPECIFIED.

REV	DATE	DESCRIPTION	DESIGNED	DRAWN	CHECKED	APPROVED

CLIENT:

HIMACHAL PRADESH ROAD AND OTHER INFRASTRUCTURE DEVELOPMENT CORPORATION LIMITED.

CONSULTANT:

SATRA SERVICES AND SOLUTIONS PVT.LTD.
#1-8-359 to 363, 4th Floor,Centre Point Building,SP Road, Begumpet, Secunderabad,Telangana – 500003, India.
Tel: +91 40 2784 0040, Fax: +91 40 2784 0050,
E-mail: info@satragroup.in, Web: www.satragroup.in

PROJECT:

HIMACHAL PRADESH STATE ROADS TRANSFORMATION PROJECT (HPSRTP)

SCALE: AS SHOWN

DATE

JOB No. : 01041055

DESIGNED | DRAWN | CHECKED | APPROVED

TITLE : TYPICAL DETAILS OF PARAPET WALL & GUARD STONE

REV. 0

SIZE : A3

DRAWING NO : HP/STR/ MISC/602

ROAD NAME : Package-IV: Upgradation of Raghunathpura-Mandi-Harpura-Bharari Road in Bilaspur District from Km 0/000 to Km 2/740.

SHEET 01 OF 01

C:\Users\satyanarayanac\appdata\local\temp\AcPublish_12036\2.HP-RAG-BHA-STR-MISC-602.dwg

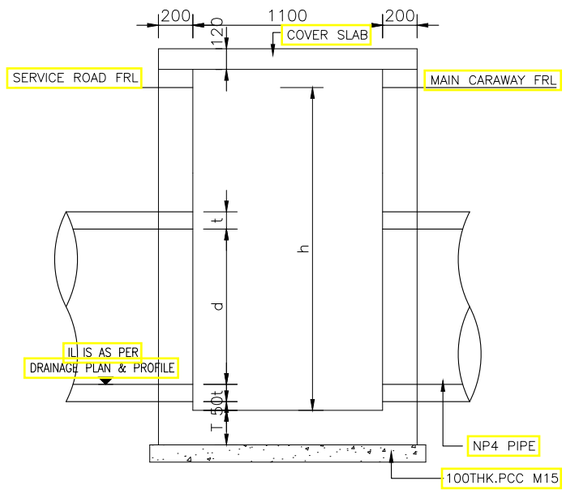

SECTION C-C

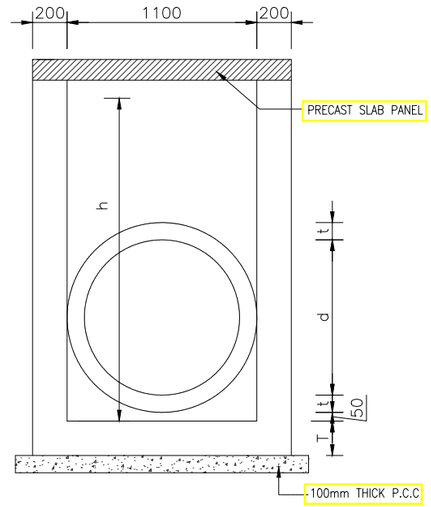

SECTION D-D

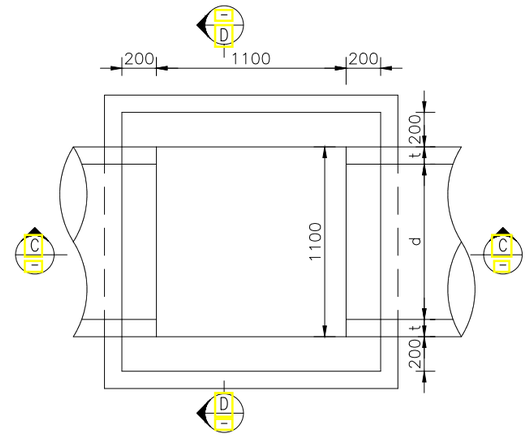

PLAN (SINGLE ROW OF PIPE)

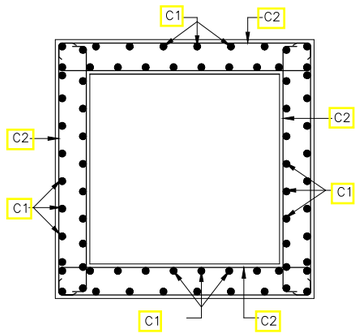

SECTION E-E

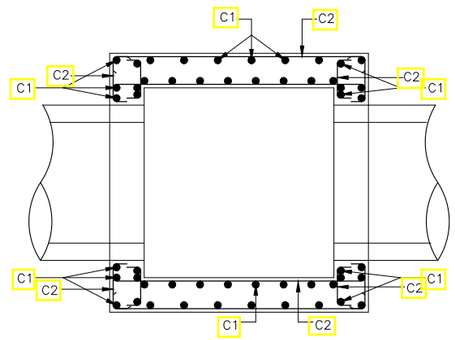

SECTION F-F

SHOWING REINFORCEMENT

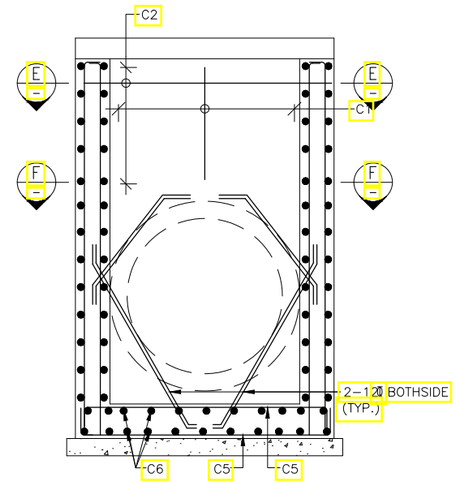

(TYP.) REINFORCEMENT SHOWING SECTIONAL ELEVATION

SCHEDULE OF REINFORCEMENT

Heights (h)	Wall Thk. (T)	C1	C2	C3	C4	C5	C6
2000	200	12ϕ 150 C/C	10ϕ 200 C/C	NOT USED	NOT USED	12ϕ 150 C/C	12ϕ 150 C/C

NOTES:

1. ALL DIMENSIONS ARE IN mm. UNLESS OTHERWISE MENTIONED. ONLY WRITTEN DIMENSIONS ARE TO BE FOLLOWED.NO DIMENSION IS TO BE SCALED.
2. CONCRETE SHALL BE DESIGN MIX WITH A MINIMUM 28 DAYS CHARACTRISTIC STRENGTH OF 25MPa.
3. ALL UNTENSIONED REINFORCEMENT SHALL BE GRADE DESIGNATION S–500 CONFORMING TO IS:1786 STANDARD WITH YIELD STRENGTH OF 500 N/Sq.mm.
4. THE CLEAR COVER FOR BOTTOM SLAB,WALL SHALL BE 40mm & SLAB SHALL BE 25mm
5. NOT MORE THAN 50%. BARS SHALL BE LAPPED AT ANY LOCATION. LAP LENGTH OF BAR SHALL BE 76 TIMES THE DIA OF BAR.

CONSTRUCTION NOTES :

1). INSPECTION CHAMBERS SHALL BE PROVIDED AT A SPACING OF 15M, IN ADDITION AT THE START, JUNCTION, AND AT THE POINT OF CHANGE IN GRADIENT.
2). R.C.C. PIPE SHALL HAVE MINIMUM LONGITUDINAL SLOPE OF 1:1000.
3). ALL FOUNDATIONS OF OPEN LINED DRAIN, INSPECTION CHAMBER SHALL BE CONSTRUCTED IN PCC M15 GRADE.
4). INSPECTION CHAMBER SHALL BE PRECAST M25 GRADE.
5). REINFORCEMENT SHALL BE TMT Fe500 AS PER SECTION 1600, UNLESS OTHERWISE SPECIFIED.

NOTES:
1. ALL DIMENSIONS ARE IN MILLIMETERS UNLESS OTHERWISE SPECIFIED.

REV	DATE	DESCRIPTION	DESIGNED	DRAWN	CHECKED	APPROVED

CLIENT:

HIMACHAL PRADESH ROAD AND OTHER INFRASTRUCTURE DEVELOPMENT CORPORATION LIMITED.

CONSULTANT:

SATRA SERVICES AND SOLUTIONS PVT.LTD.
#1-8-359 to 363, 4th Floor,Centre Point Building,SP Road, Begumpet, Secunderabad,Telangana – 500003, India.
Tel: +91 40 2784 0040, Fax: +91 40 2784 0050,
E-mail: info@satragroup.in, Web: www.satragroup.in

PROJECT:

HIMACHAL PRADESH STATE ROADS TRANSFORMATION PROJECT (HPSRTP)

SCALE: AS SHOWN

DATE

JOB No. : 01041055

DESIGNED
DRAWN
CHECKED
APPROVED

TITLE : TYPICAL DETAILS OF CHAMBER OF PIPE CULVERT

REV. 0

SIZE : A3

DRAWING NO : HP/STR/MISC/603

ROAD NAME : Package-IV: Upgradation of Raghunathpura-Mandi-Harpura-Bharari Road in Bilaspur District from Km 0/000 to Km 2/740.

SHEET 01 OF 01

C:\Users\satyanarayanac\appdata\local\temp\AcPublish_12036\3.HP-RAG-BHA-STR-MISC-603 (CHAMBER).dwg

NOTES:-

1. ALL DIMENSIONS ARE IN mm. UNLESS OTHERWISE MENTIONED. ONLY WRITTEN DIMENSIONS ARE TO BE FOLLOWED.NO DIMENSION IS TO BE SCALED.
2. CONCRETE SHALL BE DESIGN MIX WITH A MINIMUM 28 DAYS CHARACTRISTIC STRENGTH OF 25MPa.
3. THE DRAIN HAS BEEN DESIGNED FOR THE EARTH PRESSURE AND PEDESTRIAN LOADS OVER THE TOP SLAB.
4. ALL UNTENSIONED REINFORCEMENT SHALL BE GRADE DESIGNATION Fe-500D CONFORMING TO IS:1786 STANDARD.
5. CLEAR COVER TO REINFORCEMENT FOR DIFFERENT ELEMENTS SHALL BE AS FOLLOWS..
   40mm FOR BOTTOM SLAB
   40mm FOR EXTERNAL WALL
   40mm FOR TOP SLAB
6. WEEPHOLES, DIAMETRE 100mm. SHALL BE PROVIDED AT SUITABLY STAGGERED SPACING NOT EXCEEDING 1M. IN BOTH DIRECTIONS STARTING AT 150mm FROM GROUND LEVEL / LOW WATER LEVEL.
7. NOT MORETHAN 50% OF THE REINFORCEMENT SHALL BE LAPPED AT ANY SECTION. LAP LENGTH OF THE REINFORCEMENT SHALL BE 56Ø.
8. BACK FILLING SHALL CONSIST OF SELECTED EARTH CONFORMING TO APPENDIX: 6 OF IRC:78-2000 HAVING PROPERTIES C=0, Ø = 30°, d =20° & gd = 18 KN/Cum.

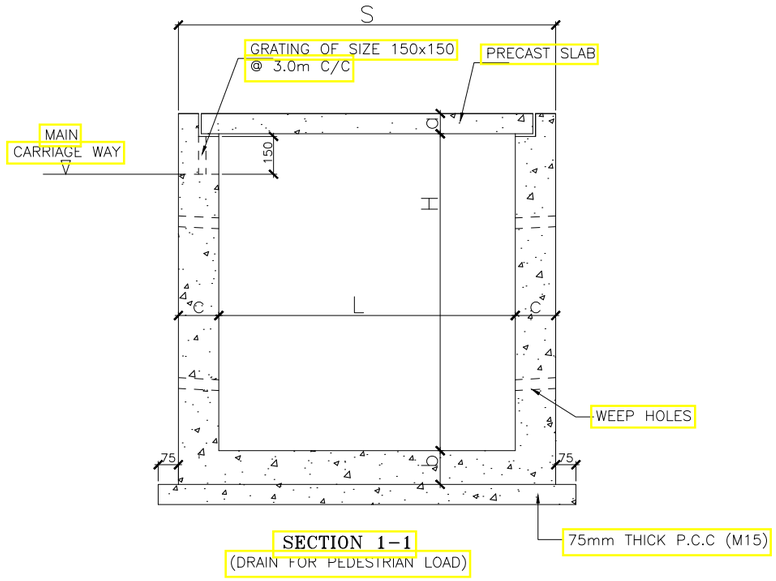

SECTION 1-1
(DRAIN FOR PEDESTRIAN LOAD)

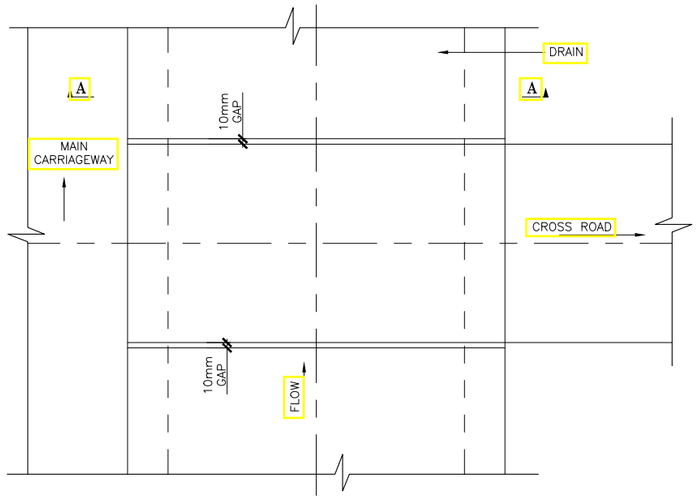

PLAN VIEW

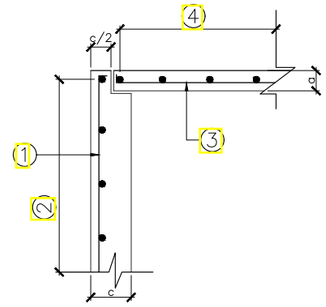

DETAIL 'A'

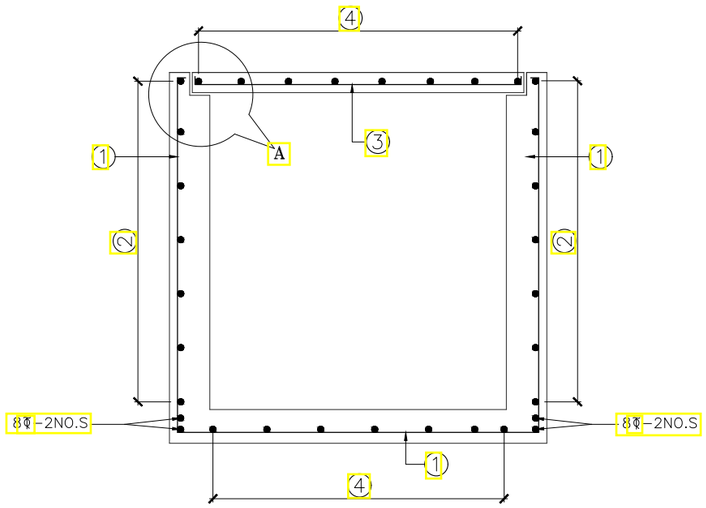

REINFORCEMENT DETAILS
FOR DRAIN FOR PEDESTRIAN LOAD

S.NO.	LOCATION	DIMENSION DETAILS: OVERALL SPAN (S)	LENGTH (L)	HEIGHT (H)	(a)	(b)	(c)	SBC Req t/m^2	REINFORCEMENT DETAILS: 1 dia	1 spacing	2 dia	2 spacing	3 dia	3 spacing	4 dia	4 spacing
1	Drain For Pedestrian Load	1000	750	1500	85	125	125	2.0	10	150	8	250	10	200	8	250

NOTES:
1. ALL DIMENSIONS ARE IN MILLIMETERS UNLESS OTHERWISE SPECIFIED.

REV	DATE	DESCRIPTION	DESIGNED	DRAWN	CHECKED	APPROVED

CLIENT:
HIMACHAL PRADESH ROAD AND OTHER INFRASTRUCTURE DEVELOPMENT CORPORATION LIMITED.

CONSULTANT:
SATRA
SATRA SERVICES AND SOLUTIONS PVT.LTD.
#1-8-359 to 363, 4th Floor,Centre Point Building,SP Road, Begumpet, Secunderabad,Telangana – 500003, India.
Tel: +91 40 2784 0040, Fax: +91 40 2784 0050,
E-mail: info@satragroup.in, Web: www.satragroup.in

PROJECT:
HIMACHAL PRADESH STATE ROADS TRANSFORMATION PROJECT (HPSRTP)

SCALE: AS SHOWN
DATE

JOB No. : 01041055
DESIGNED
DRAWN
CHECKED
APPROVED

TITLE :
TYPICAL DETAILS OF COVERED DRAIN

REV. 0
SIZE : A3

DRAWING NO : HP/STR/MISC/604

ROAD NAME : Package-IV:
Upgradation of Raghunathpura-Mandi-Harpura-Bharari Road in Bilaspur District from Km 0/000 to Km 2/740.

SHEET 01 OF 01

Z:\01041055-HPSRTP\04 Designs\02 Structures\02 Drawings\TENDER PURPOSE_21-12-2020\OSR-11\MISC\4.HP-RAG-BHA-STR-MISC-604 (COVERED DRAIN)_NEW.dwg

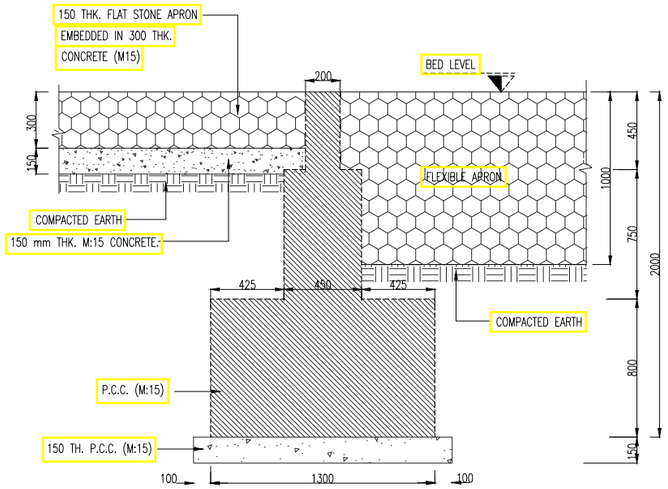

DETAILS OF CURTAIN WALL TYPE-II
(UP STREAM SIDE)
(SCALE: 1:50)

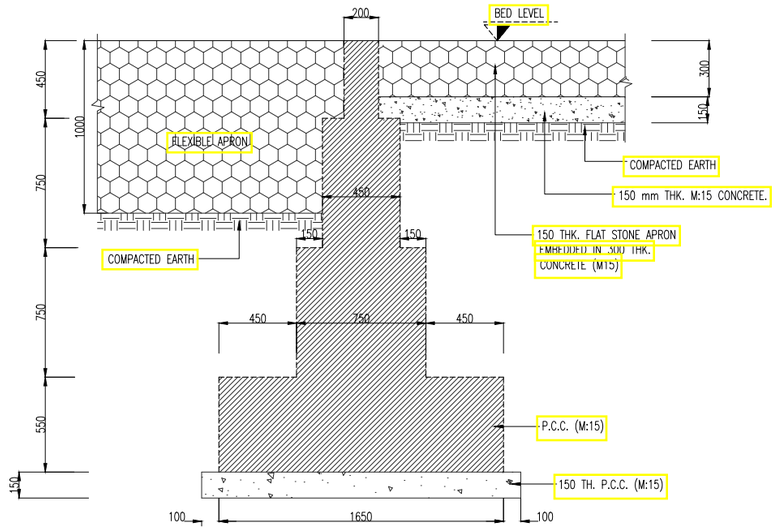

DETAILS OF CURTAIN WALL TYPE-I
(DOWN STREAM SIDE)
(SCALE: 1:50)

NOTES:
1. ALL DIMENSIONS ARE IN MILLIMETERS UNLESS OTHERWSE SPECIFIED.

REV	DATE	DESCRIPTION	DESIGNED	DRAWN	CHECKED	APPROVED

CLIENT:
HIMACHAL PRADESH ROAD AND OTHER INFRASTRUCTURE DEVELOPMENT CORPORATION LIMITED.

CONSULTANT:
SATRA SERVICES AND SOLUTIONS PVT.LTD.
#1-8-359 to 363, 4th Floor,Centre Point Building,SP Road, Begumpet, Secunderabad,Telangana – 500003, India.
Tel: +91 40 2784 0040, Fax: +91 40 2784 0050,
E-mail: info@satragroup.in, Web: www.satragroup.in

PROJECT:
HIMACHAL PRADESH STATE ROADS TRANSFORMATION PROJECT (HPSRTP)

SCALE: AS SHOWN
DATE

JOB No. : 01041055
DESIGNED
DRAWN
CHECKED
APPROVED

TITLE :
TYPICAL DETAILS OF PROTECTION WORKS

REV. 0
SIZE : A3

DRAWING NO : HP/STR/**MISC/605**

ROAD NAME : Package-IV:
Upgradation of Raghunathpura-Mandi-Harpura-Bharari Road in Bilaspur District from Km 0/000 to Km 2/740.

SHEET 01 OF 01

Z:\01041055-HPSRTP\04 Designs\02 Structures\02 Drawings\TENDER PURPOSE_21-12-2020\OSR-11\MISC\5.HP-RAG-BHA-STR-MISC-605.dwg

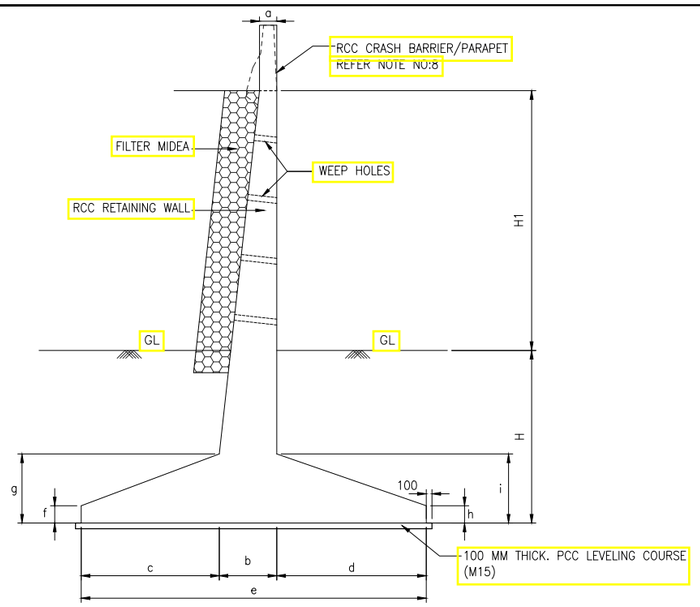

SECTIONAL ELEVATION

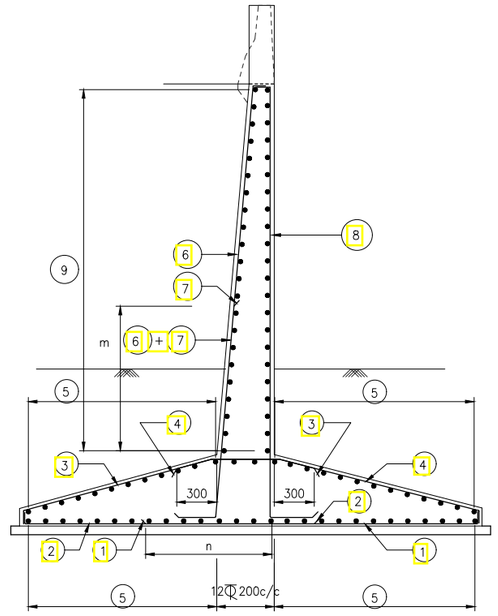

REINFORCEMENT DETAILS

DIMENSION DETAILS OF RETAINING WALL												DESGIN SBC kN/m²
S.No	H	H1	a	b	c	d	e	f	g	h	i	
1	2000	2000	300	400	1750	1300	3450	300	600	300	600	150
2	2000	3000	300	400	2000	1600	4000	300	700	300	700	170
3	2000	4000	300	500	2300	2000	4800	300	800	300	800	200
4	2000	5000	300	600	2600	2200	5400	300	1000	300	1000	250
5	2000	6000	300	800	3000	2800	6600	300	1200	300	1200	250

SCHEDULE OF REINFORCEMENT

Height (H1) / Bar Mark	Shape of bars	2000	3000	4000	5000	6000
		Bar Dia & Spacing	Bar Dia & Spacing	Bar Dia & Spacing	Bar Dia & Spacing	Bar Dia & Spacing
1		12 Φ150 C/C	12 Φ130 C/C	16 Φ160 C/C	16 Φ140 C/C	16 Φ100 C/C
2		10 Φ150 C/C	10 Φ130 C/C	10 Φ160 C/C	10 Φ140 C/C	10 Φ110 C/C
3		12 Φ150 C/C	12 Φ130 C/C	12 Φ110 C/C	16 Φ150 C/C	16 Φ120 C/C
4		10 Φ150 C/C	10 Φ130 C/C	10 Φ110 C/C	10 Φ150 C/C	10 Φ120 C/C
5		10 Φ200 C/C	10 Φ200 C/C	10 Φ200 C/C	10 Φ160 C/C	10 Φ120 C/C
6		12 Φ200 C/C	16 Φ200 C/C	20 Φ200 C/C	20 Φ200 C/C	20 Φ170 C/C
7		12 Φ200 C/C	16 Φ200 C/C	16 Φ200 C/C	20 Φ200 C/C	16 Φ170 C/C
8		12 Φ200 C/C	12 Φ200 C/C	12 Φ200 C/C	12 Φ200 C/C	12 Φ170 C/C
9		10 Φ200 C/C	10 Φ150 C/C	10 Φ120 C/C	10 Φ100 C/C	10 Φ100 C/C
m		2000	2750	3500	4250	4500
n		900	1300	1200	2000	2300

NOTE

1. ALL DIMENSIONS ARE IN MILLIMETRES, UNLESS OTHERWISE MENTIONED. ONLY WRITTEN DIMENSIONS ARE TO BE FOLLOWED. NO DIMENSION SHALL IS TO BE SCALED.
2. CONCRETE SHALL BE DESIGN MIX AND SHALL HAVE MINIUMUM 28 DAYS CHARACTERISTIC CUBE STRENGTH AS FOLLOWS.
   . RCC RETAINING WALL – M30
   . RCC PARAPET – M30
   . RCC CRASH BARRIER – M40
3. ALL UNTENSIONED REINFORCEMENT SHALL BE TMT BARS WITH GRADE DESIGNATION S–500 HAVING A YIELD STRENGTH OF Fe:500 MPa CONFORMING TO IS:1786 STANDARD.
4. BACK FILLING BEHIND WALLS SHALL CONSIST OF SELECTED EARTH CONFORMING TO APPENDIX–6 OF IRC:78–2000 HAVING PROPERTIES C=0, ø = 30° AND d = 20KN/m^3
5. NOT MORE THAN 50% OF BARS SHALL BE LAPPED AT ANY LOCATION. LAP LENGTH SHALL BE 56 X DIA OF BAR.
6. WEEPHOLES, DIAMETRE 100mm. SHALL BE PROVIDED AT SUITABLY STAGGERED SPACING NOT EXCEEDING 1M. IN BOTH DIRECTIONS.
7. THE COVER TO OUTERMOST REINFORCEMENT IN RETAINING WALL AND FOOTING SHALL BE 40 AND 75mm RESPECTIVELY.
8. REINFORCEMENT OF RCC CRASH BARRIER/PARAPET SHALL BE ANCHORED IN RETAINING WALL BEFORE CASTING THE SAME. FOR DETAILS REFER CRASH BARRIER/PARAPET RELATED DRAWINGS.
9. 600mm THICK FILTER MATERIAL BEHIND RETAINING WALL SHALLL BE LAID AS PER APPENDIX 6 OF IRC:78–2000.
10. THIS DRAWING SHALL BE READ IN CONJUNCTION WITH THE ALL GENERAL ARRANGEMENT DRAWINGS OF RESPECTIVE STRUCTURE.
11. SBC (KN/M^2) CONSIDERED IN THE DESIGN IS MENTIONED IN THE TABLE. AT CULVERT LOCATIONS THIS SHALL BE ENSURED BEFORE LAYING THE FOUNDATION CONCRETE AS DIRECTED BY ENGINNER–IN–CHARGE.
12. FOR INTERMEDIATE HEIGHTS, THE DETAILS OF NEXT HIGHER HEIGHT SHALL BE USED.

NOTES:
1. ALL DIMENSIONS ARE IN MILLIMETERS UNLESS OTHERWISE SPECIFIED.

REV	DATE	DESCRIPTION	DESIGNED	DRAWN	CHECKED	APPROVED

CLIENT:
HIMACHAL PRADESH ROAD AND OTHER INFRASTRUCTURE DEVELOPMENT CORPORATION LIMITED.

CONSULTANT:
SATRA SERVICES AND SOLUTIONS PVT.LTD.
#1-8-359 to 363, 4th Floor,Centre Point Building,SP Road, Begumpet, Secunderabad,Telangana – 500003, India.
Tel: +91 40 2784 0040, Fax: +91 40 2784 0050,
E-mail: info@satragroup.in, Web: www.satragroup.in

PROJECT:
HIMACHAL PRADESH STATE ROADS TRANSFORMATION PROJECT (HPSRTP)

SCALE: AS SHOWN
DATE

JOB No. : 01041055
DESIGNED
DRAWN
CHECKED
APPROVED

TITLE : DIMENSION AND REINFORCEMENT DETAILS OF RCC RETAINING WALL (TYPE-I)

REV. 0
SIZE : A3

DRAWING NO : HP/STR/MISC/606

ROAD NAME : Package-IV: Upgradation of Raghunathpura-Mandi-Harpura-Bharari Road in Bilaspur District from Km 0/000 to Km 2/740.

SHEET 01 OF 01

C:\Users\satyanarayana\appdata\local\temp\AcPublish_12036\7.HP-RAG-BHA-STR-MISC-607 (RCCRET TYPE-I).dwg

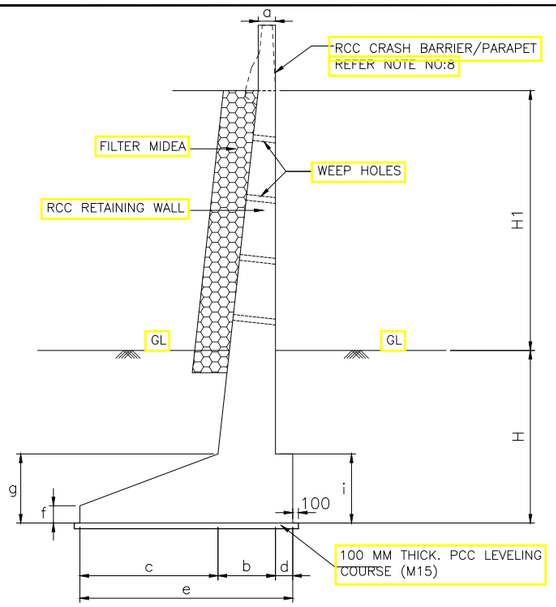

SECTIONAL ELEVATION

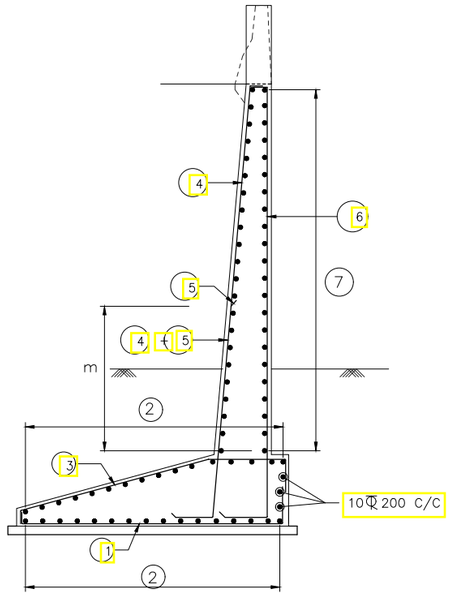

REINFORCEMENT DETAILS

NOTE

1. ALL DIMENSIONS ARE IN MILLIMETRES, UNLESS OTHERWISE MENTIONED. ONLY WRITTEN DIMENSIONS ARE TO BE FOLLOWED. NO DIMENSION SHALL IS TO BE SCALED.
2. CONCRETE SHALL BE DESIGN MIX AND SHALL HAVE MINIUMUM 28 DAYS CHARACTERISTIC CUBE STRENGTH AS FOLLOWS.
   . RCC RETAINING WALL – M30
   . RCC PARAPET – M30
   . RCC CRASH BARRIER – M40
3. ALL UNTENSIONED REINFORCEMENT SHALL BE TMT BARS WITH GRADE DESIGNATION S–500 HAVING A YIELD STRENGTH OF Fe:500 MPa CONFORMING TO IS:1786 STANDARD.
4. BACK FILLING BEHIND WALLS SHALL CONSIST OF SELECTED EARTH CONFORMING TO APPENDIX–6 OF IRC:78–2000 HAVING PROPERTIES C=0, ø = 30° (H1=1.0m, 2.0m, 3.0m & 4.0m) C=0, ø = 40° (H1=5.0m, 6.0m & 7.0m) AND d = 20KN/m^3
5. NOT MORE THAN 50% OF BARS SHALL BE LAPPED AT ANY LOCATION. LAP LENGTH SHALL BE 56 X DIA OF BAR.
6. WEEPHOLES, DIAMETRE 100mm. SHALL BE PROVIDED AT SUITABLY STAGGERED SPACING NOT EXCEEDING 1M. IN BOTH DIRECTIONS.
7. THE COVER TO OUTERMOST REINFORCEMENT IN RETAINING WALL AND FOOTING SHALL BE 40 AND 75mm RESPECTIVELY.
8. REINFORCEMENT OF RCC CRASH BARRIER/PARAPET SHALL BE ANCHORED IN RETAINING WALL BEFORE CASTING THE SAME. FOR DETAILS REFER CRASH BARRIER/PARAPET RELATED DRAWINGS.
9. 600mm THICK FILTER MATERIAL BEHIND RETAINING WALL SHALLL BE LAID AS PER APPENDIX 6 OF IRC:78–2000.
10. THIS DRAWING SHALL BE READ IN CONJUNCTION WITH THE ALL GENERAL ARRANGEMENT DRAWINGS OF RESPECTIVE STRUCTURE.
11. SBC (KN/M^2) CONSIDERED IN THE DESIGN IS MENTIONED IN THE TABLE. AT CULVERT LOCATIONS THIS SHALL BE ENSURED BEFORE LAYING THE FOUNDATION CONCRETE AS DIRECTED BY ENGINNER–IN–CHARGE.
12. FOR INTERMEDIATE HEIGHTS, THE DETAILS OF NEXT HIGHER HEIGHT SHALL BE USED.

DIMENSION DETAILS OF RETAINING WALL											DESGIN SBC KN/m²
S.No	H	H1	a	b	c	d	e	f	g	i	
1	2000	1000	300	400	2700	300	3400	200	400	400	180
2	2000	2000	300	500	3800	300	4600	300	600	600	180
3	2000	3000	300	700	4800	300	5800	300	700	700	220
4	2000	4000	300	900	5800	300	7000	300	1200	1200	250
5	2000	5000	300	900	6000	300	7200	500	1500	1500	300
6	2000	6000	300	1200	6000	750	7950	500	1800	1800	300
7	2000	7000	300	1200	6500	800	8500	500	1800	1800	350

SCHEDULE OF REINFORCEMENT

Height (H1) / Bar Mark	Shape of bars	1000	2000	3000	4000	5000	6000	7000
		Bar Dia & Spacing	Bar Dia & Spacing	Bar Dia & Spacing	Bar Dia & Spacing	Bar Dia & Spacing	Bar Dia & Spacing	Bar Dia & Spacing
1		10Φ 150 C/C	12Φ 120 C/C	16Φ 200 C/C	16Φ 120 C/C	20Φ 130 C/C	20Φ 100 C/C	20Φ 100 C/C
2		10Φ 200 C/C	10Φ 200 C/C	10Φ 110 C/C	12Φ 100 C/C	12Φ 100 C/C	12Φ 100 C/C	16Φ 100 C/C
3		12Φ 150 C/C	16Φ 150 C/C	20Φ 100 C/C	25Φ 120 C/C	25Φ 100 C/C	25Φ 110 C/C	32Φ 120 C/C
4		12Φ 200 C/C	12Φ 200 C/C	12Φ 200 C/C	12Φ 180 C/C	12Φ 180 C/C	12Φ 200 C/C	12Φ 200 C/C
5		–	12Φ 200 C/C	12Φ 200 C/C	12Φ 180 C/C	12Φ 180 C/C	16Φ 200 C/C	20Φ 200 C/C
6		10Φ 200 C/C	10Φ 200 C/C	10Φ 200 C/C	10Φ 150 C/C	10Φ150 C/C	12Φ 150 C/C	12Φ 150 C/C
7		10Φ 200 C/C	10Φ 250 C/C	10Φ 200 C/C	10Φ 150 C/C	10Φ 150 C/C	10Φ 150 C/C	12Φ 150 C/C
m		–	1400	1800	1800	2000	2700	4200

NOTES:
1. ALL DIMENSIONS ARE IN MILLIMETERS UNLESS OTHERWISE SPECIFIED.

REV	DATE	DESCRIPTION	DESIGNED	DRAWN	CHECKED	APPROVED

CLIENT:
HIMACHAL PRADESH ROAD AND OTHER INFRASTRUCTURE DEVELOPMENT CORPORATION LIMITED.

CONSULTANT:
SATRA
SATRA SERVICES AND SOLUTIONS PVT.LTD.
#1-8-359 to 363, 4th Floor,Centre Point Building,SP Road, Begumpet, Secunderabad,Telangana – 500003, India.
Tel: +91 40 2784 0040, Fax: +91 40 2784 0050,
E-mail: info@satragroup.in, Web: www.satragroup.in

PROJECT:
HIMACHAL PRADESH STATE ROADS TRANSFORMATION PROJECT (HPSRTP)

SCALE: AS SHOWN
DATE

JOB No. : 01041055
DESIGNED
DRAWN
CHECKED
APPROVED

TITLE :
DIMENSION AND REINFORCEMENT DETAILS OF RCC RETAINING WALL (TYPE-II)

REV. 0
SIZE : A3

DRAWING NO : HP/STR/MISC/607

ROAD NAME : Package-IV:
Upgradation of Raghunathpura-Mandi-Harpura-Bharari Road in Bilaspur District from Km 0/000 to Km 2/740.

SHEET 01 OF 01

C:\Users\satyanarayanac\appdata\local\temp\AcPublish_12036\8.HP-RAG-BHA-STR-MISC-608 (RCCRET TYPE-II).dwg